CONCURRENT SUBDIVISION CONSTRUCTION PLANS FOR

VERONA RESERVE

(F.K.A. SUNRISE VILLAGE SUBDIVISION)

PART OF SECTION 10, TOWNSHIP 39 SOUTH, RANGE 19 EAST
SARASOTA COUNTY, FLORIDA

GENERAL SITE CONSTRUCTION NOTES ⚠⚠

1.) THERE SHALL BE NO CHANGE OR DEVIATION FROM THESE PLANS WITHOUT PRIOR APPROVAL BY THE ENGINEER.

2.) ALL CLEARING AND GRUBBING DEBRIS TO BE BURNED OR REMOVED FROM SITE AND IS PART OF CLEARING AND GRUBBING ITEM.

3.) ALL PROPOSED GROUND ELEVATIONS ARE FINISHED SOD ELEVATIONS. FINISHED EARTHWORK GRADING SHALL BE 0.2 FEET BELOW ELEVATIONS SHOWN TO ALLOW FOR SOD THICKNESS.

4.) SODDING INCLUDES MAINTAINING SLOPES AND SOD UNTIL COMPLETION AND ACCEPTANCE OF TOTAL PROJECT OR GROWTH IS ESTABLISHED, WHICHEVER COMES LAST. UNTIL THEN, ALL EROSION, SILTATION, AND MAINTENANCE OF GRADES IS THE RESPONSIBILITY OF THE CONTRACTOR.

5.) CERTAIN TREES ARE DESIGNATED BY THE OWNER TO BE SAVED AND PROTECTED BY THE CONTRACTOR. IT IS ASSUMED THESE TREES ARE HEALTHY AND ARE EXPECTED TO BE PART OF THE LANDSCAPE DEVELOPMENT. THEREFORE, IF ANY TREE(S) ARE DAMAGED BY CONSTRUCTION OPERATIONS OR BY OTHER MEANS (EXCLUDING LIGHTING, WINDSTORM AND OTHER ACTS OF GODS) PERISHES WITHIN THE CONSTRUCTION PERIOD, IT SHALL BE THE RESPONSIBILITY OF THE CONTRACTOR TO REMOVE AND DISPOSE OF THOSE TREES. NO ADDITIONAL COMPENSATION SHALL BE MADE BY THE OWNER FOR THE LABOR, MATERIAL, OR MACHINERY REQUIRED TO REMOVE SAID TREE(S).

6.) WHERE EXCAVATIONS ARE IN CLOSE PROXIMITY OF TREES, THE CONTRACTOR SHALL USE EXTREME CARE IN NOT DAMAGING THE ROOT SYSTEM. NO EQUIPMENT, SUPPLIES, OR VEHICLES SHALL BE STORED OR PARKED WITHIN THE DRIP LINE OF TREES TO REMAIN AND BE PRESERVED. IT SHALL BE THE RESPONSIBILITY OF THE CONTRACTOR TO INFORM ALL OF HIS EMPLOYEES AND SUBCONTRACTORS OF THIS REQUIREMENT AND TO ENFORCE THE SAME.

7.) NOTIFY "SUNSHINE STATE ONE CALL (1-800-432-4770)", COMCAST CABLE, SARASOTA COUNTY UTILITIES, FLORIDA POWER & LIGHT, CENTURY LINK AND ANY OTHER UTILITIES (GAS COMPANIES, ETC.) PRIOR TO CONSTRUCTION OPERATION AND PRIOR TO ANY CONNECTION TO EXISTING UTILITIES. IT IS THE CONTRACTORS RESPONSIBILITY TO PROTECT EXISTING UTILITIES FROM DAMAGE.

8.) ALL UTILITY LINES, STORM DRAIN LINES AND ACCESSORIES SUCH AS, BUT NOT LIMITED TO, MANHOLES, CLEANOUTS, SEWER AND WATER SERVICES, VALVES, FIRE HYDRANTS AND INLETS SHALL BE CONSTRUCTED TO ALIGNMENT AND LOCATIONS SHOWN ON PLANS UNLESS OTHERWISE DIRECTED BY THE ENGINEER.

9.) CLEARING, GRUBBING, STRIPPING, AND COMPACTION SHALL BE INSPECTED BY THE ENGINEER OR HIS DULY APPOINTED REPRESENTATIVE PRIOR TO FILLING.

10.) PRIOR TO THE START OF CONSTRUCTION ACTIVITIES, PRESERVE AREAS WITHIN AND ADJOINING THE AREA OF CONSTRUCTION ACTIVITY SHALL BE PROTECTED BY ERECTION OF TREE PROTECTION BARRICADES AND / OR SILT BARRIERS. TREE PROTECTION BARRICADES SHALL MEET THE STANDARDS OF THE SARASOTA COUNTY TREE PROTECTION ORDINANCE. SILT BARRICADES SHALL BE CONSTRUCTED IN ACCORDANCE WITH THE BEST MANAGEMENT PRACTICES DETAIL DRAWING. THE ENGINEER SHALL DETERMINE THE EXTENT AND TYPE OF PROTECTIVE MEASURES TO BE CONSTRUCTED FOR THE PROTECTION OF PRESERVE AREAS SUBJECT TO THE APPROVAL OF THE SARASOTA COUNTY NATURAL SCIENCES DIVISION. THE CONTRACTOR SHALL NOTIFY THE SARASOTA COUNTY NATURAL SCIENCES DIVISION WHEN PRESERVE AREA BARRICADES AND BARRIERS ARE IN PLACE.

11.) ALL CONCRETE PIPE JOINTS SHALL HAVE A FILTER FABRIC JACKET MINIMUM 12" EACH SIDE OF JOINT WITH MIN. 24" OVERLAP AT SEAM PER FDOT INDEX #280 & #199 & ALL APPLICABLE COUNTY REQUIREMENTS.

12.) ALL SIDEWALKS AND SIDEWALK CROSSINGS SHALL BE CONSTRUCTED IN ACCORDANCE WITH FDOT INDEX #304 AND #310, THE AMERICANS WITH DISABILITIES ACT (ADA), AND THE FLORIDA ACCESSIBILITY CODE AT CURBS, GUTTERS, SIDEWALKS, INTERSECTIONS, ETC.

13.) ANY WELLS DISCOVERED ON SITE THAT WILL HAVE NO USE MUST BE PLUGGED BY A LICENSED WELL DRILLING CONTRACTOR IN AN APPROVED MANNER.

14.) ANY WELLS DISCOVERED DURING EARTH MOVING, EXCAVATION OR CONSTRUCTION SHALL BE REPORTED TO THE SARASOTA COUNTY HEALTH DEPARTMENT, OFFICE OF ENVIRONMENTAL ENGINEERING WITHIN 24 HOURS AFTER DISCOVERY IS MADE.

15.) A SEPARATE BUILDING PERMIT WILL BE REQUIRED PRIOR TO CONSTRUCTION OF ANY RETAINING WALL SYSTEM, ALL MASONRY, CONCRETE OR ENGINEERED STYROFOAM PRIVACY WALLS, BUILDINGS, SWIMMING POOLS OR ACCESSORY STRUCTURES.

16.) THE FOLLOWING REQUIREMENTS APPLY TO ALL BUILDING CONSTRUCTION OR ALTERATION, OR LAND ALTERATION ACTIVITIES IN ACCORDANCE WITH SARASOTA COUNTY ORDINANCE # 2004-073 AND WITH THE HISTORIC PRESERVATION CHAPTER OF APOXSEE: THE REVISED AND UPDATED SARASOTA COUNTY COMPREHENSIVE PLAN:

A.) IF EVIDENCE OF THE EXISTENCE OF HISTORIC RESOURCES IS DISCOVERED OR OBSERVED AT DEVELOPMENT SITES OR DURING DEVELOPMENT ACTIVITIES AFTER FINAL APPROVAL, ALL WORK SHALL CEASE IN THE AREA OF EFFECT AS DETERMINED BY THE DIRECTOR. THE DEVELOPER, OWNER, CONTRACTOR, OR AGENT THEREOF SHALL NOTIFY THE DIRECTOR OF HISTORICAL RESOURCES WITHIN TWO WORKING DAYS. EXAMPLES OF SUCH EVIDENCE INCLUDE WHOLE OR FRAGMENTARY STONE TOOLS, SHELL TOOLS, ABORIGINAL OR HISTORIC POTTERY, HISTORIC GLASS, HISTORIC BOTTLES, BONE TOOLS, HISTORIC BUILDING FOUNDATIONS, SHELL MOUNDS, SHELL MIDDENS, OR SAND MOUNDS. THE DIRECTOR SHALL ASSESS THE SIGNIFICANCE OF THE FINDS WITHIN TREE WORKING DAYS OF NOTIFICATION AND MITIGATE ANY ADVERSE EFFECTS SO AS TO MINIMIZE DELAYS TO DEVELOPMENT ACTIVITIES.

B.) IF ANY HUMAN SKELETAL REMAINS OR ASSOCIATED BURIAL ARTIFACTS ARE DISCOVERED AT DEVELOPMENT SITES OR DURING DEVELOPMENT ACTIVITY, ALL WORK IN THE AREA MUST CEASE, AND THE PERMITTEE MUST IMMEDIATELY NOTIFY THE NEAREST LAW ENFORCEMENT OFFICE AND NOTIFY THE DIRECTOR OF HISTORICAL RESOURCES WITHIN TWO WORKING DAYS. ACCORDING TO CHAPTER 872, FLORIDA STATUTES, IT IS UNLAWFUL TO DISTURB, VANDALIZE, OR DAMAGE A HUMAN BURIAL.

17.) POTABLE WATER AND WASTEWATER SERVICE IS PROVIDED BY SARASOTA COUNTY UTILITIES.

18.) IRRIGATION SYSTEM SHALL BE PRIVATELY OWNED AND MAINTAINED.

19.) A TREE REMOVAL AND PROTECTION PERMIT WILL BE REQUIRED PRIOR TO ANY TREE REMOVAL OR CONSTRUCTION.

20.) EROSION AND SEDIMENTATION CONTROL BMPS IN ADDITION TO THOSE PRESENTED ON THE PLANS AND OUTLINED IN THE EROSION AND SEDIMENTATION CONTROL PLAN (ECP) OR STORMWATER POLLUTION PREVENTION PLAN (SWPPP) SHALL BE IMPLEMENTED AS NECESSARY TO PREVENT TURBID DISCHARGES FROM FLOWING ONTO ADJACENT PROPERTIES OR ROADWAYS, OFFSITE STORMWATER CONVEYANCES, OR OFFSITE RECEIVING WATERS. BMPS SHALL BE DESIGNED, INSTALLED, AND MAINTAINED BY THE SITE OPERATOR TO ENSURE THAT OFF SITE SURFACE WATER QUALITY REMAINS CONSISTENT WITH STATE AND LOCAL REGULATIONS. [THE OPERATOR IS THE ENTITY THAT OWNS OR OPERATES THE CONSTRUCTION ACTIVITY AND HAS AUTHORITY TO CONTROL THOSE ACTIVITIES AT THE PROJECT NECESSARY TO ENSURE COMPLIANCE.]

21.) OFF SITE SURFACE WATER DISCHARGES WITH TURBIDITY IN EXCESS OF 29 NEPHELOMETRIC TURBIDITY UNITS (NTUS) ABOVE BACKGROUND LEVEL SHALL BE IMMEDIATELY CORRECTED. SUCH INCIDENTS SHALL BE REPORTED TO WATER RESOURCES WITHIN 24 HOURS OF THE OCCURRENCE (PH: 941-861-5000; FAX: 941-861-0986). THE REPORT SHALL INCLUDE THE CAUSE OF THE DISCHARGE AND CORRECTIVE ACTIONS TAKEN.

22.) THE OPERATOR SHALL ENSURE THAT ADJACENT PROPERTIES ARE NOT IMPACTED BY WIND EROSION, OR EMISSIONS OF UNCONFINED PARTICULATE MATTER IN ACCORDANCE WITH RULE (62-296.320(4)(c)1, F.A.C., BY TAKING APPROPRIATE MEASURES TO STABILIZE AFFECTED AREAS.

23.) FUEL AND OTHER PETROLEUM PRODUCT SPILLS THAT ENTER STORMWATER DRAINS OR WATERBODIES, OR FUEL AND OTHER PETROLEUM PRODUCT SPILLS THAT ARE IN EXCESS OF 25 GALLONS SHALL BE CONTAINED, CLEANED UP, AND IMMEDIATELY REPORTED TO WATER RESOURCES (PH:941-861-5000; FAX: 941-861-0986). SMALLER GROUND SURFACE SPILLS SHALL BE CLEANED UP AS SOON AS PRACTICAL.

24.) IF CONTAMINATED SOIL OR AND/OR GROUNDWATER IS DISCOVERED DURING DEVELOPMENT OF THE SITE, ALL ACTIVITY IN THE VICINITY OF THE CONTAMINATION SHALL IMMEDIATELY CEASE, AND WATER RESOURCES SHALL BE CONTACTED (PH: 941-861-5000; FAX: 941-861-0986).

25.) DEPARTMENT OF ENVIRONMENTAL PROTECTION WATER AND WASTEWATER PERMITS ARE REQUIRED.

26.) THE PROPER BACKFLOW PREVENTION DEVICE MUST BE INSTALLED AND CERTIFIED ON THE CENTRAL WATER CONNECTION.

27.) PAVED INVERTS WITHIN DRAINAGE BASINS SHALL PRECLUDE PONDED WATER & ALL DRAINAGE CULVERT JOINTS SHALL BE WRAPPED PER FDOT INDEX 208.

28.) A SARASOTA COUNTY UTILITY CONSTRUCTION PERMIT IS REQUIRED.

29.) A SARASOTA COUNTY RIGHT-OF-WAY USE PERMIT WILL BE REQUIRED.

30.) ALL CONCRETE FOR ROADWAY AND DRAINAGE STRUCTURES SHALL HAVE A COMPRESSIVE STRENGTH OF 3000 P.S.I. PER FDOT STANDARD SPECIFICATIONS SECTION 346 (2000 ED).

31.) IN THE EVENT THAT THE CONSTRUCTION SITE IS ABANDONED PRIOR TO THE PROJECT COMPLETION, ALL CONSTRUCTION AND VEGETATIVE DEBRIS SHALL BE REMOVED FROM THE SITE AND DISPOSED OF AT AN APPROVED LANDFILL FACILITY.

32.) DEMOLITION OF EXISTING INFRASTRUCTURE WILL OCCUR PRIOR TO STARTING NEW WORK. THESE EFFORTS WILL BE COORDINATED WITH SARASOTA COUNTY STAFF MEMBERS IN ORDER TO TRY AND SALVAGE ANY STRUCTURES OR APPURTENANCES.

33.) THE WETLANDS, XERIC HAMMOCK, AND ASSOCIATED UPLAND VEGETATIVE BUFFERS SHALL BE MAINTAINED IN ACCORDANCE WITH MANAGEMENT GUIDELINES CONTAINED WITHIN THE COMPREHENSIVE PLAN AS A PRESERVE AND LABELED A PRESERVE ON ALL PLANS. ALL ACTIVITIES INVOLVING BUT NOT LIMITED TO FILLING, EXCAVATING, WELL DRILLING, ALTERING VEGETATION (INCLUDING TRIMMING OF BOTH TREES AND UNDERSTORY) AND STORING OF MATERIALS SHALL BE PROHIBITED WITHIN PRESERVATION AREAS, UNLESS WRITTEN APPROVAL IS FIRST OBTAINED FROM RESOURCE PROTECTION SERVICES. EXCEPTION MAY BE GRANTED BY RESOURCE PROTECTION SERVICES TO FACILITATE IMPLEMENTATION OF APPROVED HABITAT MANAGEMENT PLANS OR THE HAND REMOVAL OF NUISANCE/INVASIVE VEGETATION.

34.) ELEVATIONS ARE BASED ON NATIONAL GEODETIC VERTICAL DATUM (NGVD-1929).

PROPERTY DESCRIPTION

PARCEL 1

COMMENCE AT THE SOUTHEAST CORNER OF SECTION 10, TOWNSHIP 39 SOUTH, RANGE 19 EAST, SARASOTA COUNTY, FLORIDA, THENCE N 89°45'49"W., ALONG THE SOUTH LINE OF SAID SECTION 10, A DISTANCE OF 840.73 FEET TO THE POINT OF BEGINNING, CONTINUE ALONG SAID SOUTH LINE, SAME BEING THE CENTERLINE OF VACATED BREVARD ROAD PER OFFICIAL RECORDS BOOK 1543, PAGE 372, PUBLIC RECORDS OF SARASOTA COUNTY, FLORIDA, THENCE N.89°45'49"W. ALONG SAID SOUTH LINE OF VACATED BREVARD ROAD A DISTANCE OF 479.97 FEET, TO THE INTERSECTION OF THE CENTERLINE OF VACATED DELRAY ROAD PER OFFICIAL RECORDS BOOK 1543, PAGE 372, PUBLIC RECORDS OF SARASOTA COUNTY, FLORIDA. THENCE N.00°38'16"E., ALONG SAID CENTERLINE OF DELRAY ROAD, A DISTANCE OF 731.57 FEET TO A POINT ON THE EXTENSION OF THE SOUTH LINE OF TRACT 42, VENICE FARMS PER OFFICIAL PLAT BOOK 2, PAGE 179, OF THE PUBLIC RECORDS OF SARASOTA COUNTY, FLORIDA, THENCE N 89°20'42"W., ALONG SAID SOUTH LINE AND THE EXTENSION THEREOF, A DISTANCE OF 657.76 FEET TO THE WEST LINE OF SAID TRACT 42, THENCE N.00°33'10"E., ALONG THE WEST LINE OF TRACTS 42 AND 43 OF SAID PLAT OF VENICE FARMS, A DISTANCE OF 688.90 FEET TO THE NORTHWEST CORNER OF SAID TRACT 43, THENCE N 89°22'50"W., ALONG THE SOUTH LINE OF TRACT 44 OF SAID PLAT OF VENICE FARMS, A DISTANCE OF 316.59 FEET TO THE WEST LINE OF SAID TRACT 44, THENCE N.00°27'17"E., ALONG THE WEST LINE OF SAID TRACT 44, A DISTANCE OF 659.38 FEET TO THE SOUTH RIGHT OF WAY LINE OF EAST VENICE AVENUE PER ORDER OF TAKING IN OFFICIAL RECORDS BOOK 1835, PAGE 1475, PUBLIC RECORDS OF SARASOTA COUNTY, FLORIDA, THENCE S.89°21'47"E., ALONG SAID SOUTH RIGHT OF WAY LINE, A DISTANCE OF 634.01 FEET TO A POINT ON THE WEST LINE OF TRACT 46 OF SAID PLAT OF VENICE FARMS, THENCE S 00°31'08"W., ALONG THE WEST LINE OF SAID TRACT 46, A DISTANCE OF 659.19 FEET TO THE SOUTH LINE OF SAID TRACT 46, THENCE S.89°22'50"E., ALONG SAID SOUTH LINE AND THE EXTENSION THEREOF A DISTANCE OF 341.24 FEET TO THE CENTER LINE OF SAID VACATED DELRAY ROAD PER MONUMENTATION, THENCE S.00°23'34"E., ALONG SAID CENTER LINE A DISTANCE OF 0.71 FEET TO THE SOUTHWEST CORNER OF THE LANDS DESCRIBED IN OFFICIAL RECORDS BOOK 1833, PAGE 1331, PUBLIC RECORDS OF SARASOTA COUNTY, FLORIDA, THENCE S.89°27'07"E., ALONG THE SOUTH LINE OF SAID LANDS DESCRIBED IN OFFICIAL RECORDS BOOK 1833, PAGE 1331, A DISTANCE OF 194.86 FEET TO THE SOUTHEAST CORNER OF SAID LANDS DESCRIBED IN OFFICIAL RECORDS BOOK 1833, PAGE 1331, THENCE N.00°38'02"E., ALONG THE EAST LINE OF LANDS DESCRIBED IN OFFICIAL RECORDS BOOK 1833, PAGE 1331 A DISTANCE OF 299.88 FEET TO THE NORTHEAST CORNER OF SAID LANDS DESCRIBED IN OFFICIAL RECORDS BOOK 1833, PAGE 1331, THENCE N.89°25'23"W., ALONG THE NORTH LINE OF SAID LANDS DESCRIBED IN OFFICIAL RECORDS BOOK 1833, PAGE 1331 AND ITS WESTERLY EXTENSION A DISTANCE OF 194.97 FEET TO THE CENTER LINE OF VACATED DELRAY ROAD PER MONUMENTATION, THENCE N.00°32'08"E., ALONG SAID CENTER LINE, A DISTANCE OF 369.73 FEET TO A POINT ON THE SOUTH RIGHT OF WAY LINE OF EAST VENICE AVENUE, THENCE S.89°21'23"E., ALONG SAID SOUTH RIGHT OF WAY LINE A DISTANCE OF 1091.74 FEET, THENCE CONTINUE ALONG SAID SOUTH RIGHT OF WAY LINE OF EAST VENICE AVENUE S.00°07'44"W., A DISTANCE OF 4.00 FEET THENCE CONTINUE ALONG SAID SOUTH RIGHT OF WAY LINE OF EAST VENICE AVENUE S.89°22'35"E., A DISTANCE OF 234.27 FEET TO A POINT ON THE WEST RIGHT OF WAY OF JACARANDA BOULEVARD (150' WIDE), THENCE S 00°47'08"W., ALONG SAID WEST RIGHT OF WAY OF JACARANDA BOULEVARD, A DISTANCE OF 630.00 FEET TO A POINT ON A CURVE TO THE RIGHT, HAVING A RADIUS OF 1357.39 FEET, A CENTRAL ANGLE OF 42°20'46", A CHORD BEARING S.21°54'40"W., AND A CHORD LENGTH OF 980.54 FEET. THENCE CONTINUE ALONG THE WEST RIGHT OF WAY OF JACARANDA BOULEVARD ALONG THE ARC OF SAID CURVE, AN ARC LENGTH OF 1003.22 FEET TO THE POINT OF TANGENCY OF SAID CURVE. THENCE S 43°05'08"W., CONTINUE ALONG SAID WEST RIGHT OF WAY LINE A DISTANCE OF 721.96 FEET TO THE POINT OF BEGINNING ALL BEING IN SECTION 10, TOWNSHIP 39 SOUTH, RANGE 19 EAST, SARASOTA COUNTY, FLORIDA.

PARCEL 2

TRACT 36, VENICE FARMS, AS PER THE PLAT THEREOF RECORDED IN PLAT BOOK 2, PAGE 179, PUBLIC RECORDS OF SARASOTA COUNTY, FLORIDA, LESS RIGHT OF WAY FOR VENICE AVENUE.

LESS THE FOLLOWING DESCRIBED PROPERTY (5 ACRE PARCEL)

COMMENCE AT THE SOUTHEAST CORNER OF SECTION 10, TOWNSHIP 39 SOUTH, RANGE 19 EAST, SARASOTA COUNTY, FLORIDA, NORTH 89°46'10" WEST, ALONG THE SOUTH LINE OF SAID SECTION 10, TO THE WESTERLY RIGHT OF WAY OF JACARANDA BOULEVARD AS RECORDED IN ROAD PLAT BOOK 3, PAGE 27, PUBLIC RECORDS OF SARASOTA COUNTY, FLORIDA A DISTANCE OF 840.76 FEET; THENCE NORTH 43°05'09" EAST, ALONG THE SAID WESTERLY RIGHT OF WAY OF JACARANDA BOULEVARD A DISTANCE OF 722.24 FEET TO A POINT ON A CURVE TO THE LEFT WHICH THE RADIUS LIES NORTH 46°54'51" WEST, SAID CURVE HAVING A RADIUS OF 1357.39 FEET, A CENTRAL ANGLE OF 42°20'55", A CHORD BEARING OF NORTH 21°54'42" EAST AND A CHORD LENGTH OF 980.60 FEET; THENCE CONTINUING ALONG SAID WESTERLY RIGHT OF WAY OF JACARANDA BOULEVARD ALONG THE ARC OF SAID CURVE, AN ARC LENGTH OF 1003.28 FEET, THENCE CONTINUING ALONG SAID WESTERLY RIGHT OF WAY OF JACARANDA BOULEVARD NORTH 00°44'14" EAST TO THE SOUTH RIGHT OF WAY LINE OF EAST VENICE BOULEVARD PER ORDER OF TAKING IN OFFICIAL RECORDS BOOK 1835, PAGE 1475, PUBLIC RECORDS OF SARASOTA COUNTY, FLORIDA; A DISTANCE OF 629.73 FEET. THE FOLLOWING (3) CALLS ARE ALONG THE SAID SOUTH RIGHT OF WAY LINE OF EAST VENICE AVENUE, THENCE NORTH 89°22'40" WEST A DISTANCE OF 234.70 FEET; THENCE NORTH 00°37'20" EAST A DISTANCE OF 4.00 FEET; THENCE NORTH 89°22'40" WEST, A DISTANCE OF 410.11 FEET FOR A POINT OF BEGINNING; THENCE SOUTH 00°45'30" WEST A DISTANCE OF 449.07 FEET; THENCE NORTH 89°22'41" WEST TO THE EAST LINE OF THE LAND DESCRIBED IN OFFICIAL RECORDS BOOK 1833, PAGE 1331, PUBLIC RECORDS OF SARASOTA COUNTY, FLORIDA, A DISTANCE OF 484.41 FEET; THENCE NORTH 00°36'23" EAST ALONG SAID EAST LINE TO THE SAID SOUTH RIGHT OF WAY LINE OF EAST VENICE AVENUE A DISTANCE OF 449.07 FEET; THENCE SOUTH 89°22'40" EAST ALONG SAID SOUTH RIGHT OF WAY A DISTANCE OF 485.60 FEET TO THE POINT OF BEGINNING.

ALSO LESS (15 ACRE PARCEL)

COMMENCE AT THE SOUTHEAST CORNER OF SECTION 10, TOWNSHIP 39 SOUTH, RANGE 19 EAST, SARASOTA COUNTY, FLORIDA, NORTH 89°46'10" WEST, ALONG THE SOUTH LINE OF SAID SECTION 10, TO THE WESTERLY RIGHT OF WAY OF JACARANDA BOULEVARD AS RECORDED IN ROAD PLAT BOOK 3, PAGE 27, PUBLIC RECORDS OF SARASOTA COUNTY, FLORIDA A DISTANCE OF 840.76 FEET; THENCE NORTH 43°05'09" EAST, ALONG THE SAID WESTERLY RIGHT OF WAY OF JACARANDA BOULEVARD A DISTANCE OF 722.24 FEET TO A POINT ON A CURVE TO THE LEFT WHICH THE RADIUS LIES NORTH 46°54'51" WEST, SAID CURVE HAVING A RADIUS OF 1357.39 FEET, A CENTRAL ANGLE OF 25°29'45", A CHORD BEARING OF NORTH 30°20'16" EAST AND A CHORD LENGTH OF 599.05 FEET, THENCE CONTINUING ALONG SAID WESTERLY RIGHT OF WAY OF JACARANDA BOULEVARD ALONG THE ARC OF SAID CURVE, AN ARC LENGTH OF 604.02 FEET FOR A POINT OF BEGINNING; THENCE NORTH 89°15'05" WEST, A DISTANCE OF 586.90 FEET, THENCE NORTH 00°45'30" EAST TO THE SOUTH RIGHT OF WAY LINE OF EAST VENICE AVENUE PER ORDER OF TAKING OFFICIAL RECORDS BOOK 1835, PAGE 1475, PUBLIC RECORDS OF SARASOTA COUNTY, FLORIDA; A DISTANCE OF 1025.84 FEET. THE FOLLOWING (3) CALLS ARE ALONG THE SAID SOUTHERLY RIGHT OF WAY LINE OF EAST VENICE AVENUE, THENCE SOUTH 89°22'40" EAST A DISTANCE OF 410.11 FEET; THENCE SOUTH 00°37'20" WEST A DISTANCE OF 4.00 FEET; THENCE SOUTH 89°22'40" EAST TO THE SAID WESTERLY RIGHT OF WAY OF JACARANDA BOULEVARD A DISTANCE OF 234.70 FEET; THENCE SOUTH 00°44'14" WEST ALONG SAID WESTERLY RIGHT OF WAY OF JACARANDA BOULEVARD A DISTANCE OF 629.73 FEET TO A POINT ON A CURVE TO THE RIGHT, WHICH THE RADIUS LIES NORTH 89°15'46" WEST, SAID CURVE HAVING A RADIUS OF 1357.39 FEET, A CENTRAL ANGLE OF 16°51'10", A CHORD BEARING OF SOUTH 09°09'49" WEST AND A CHORD LENGTH OF 397.82 FEET, THENCE CONTINUING ALONG SAID WESTERLY RIGHT OF WAY OF JACARANDA BOULEVARD ALONG THE ARC OF SAID CURVE, AN ARC LENGTH OF 399.26 FEET TO THE POINT OF BEGINNING.

AND ALSO LESS (1.65 ACRE PARCEL)

A PORTION OF THOSE LANDS DESCRIBED IN OFFICIAL RECORDS INSTRUMENT #2002040115, AS RECORDED IN THE PUBLIC RECORDS OF SARASOTA COUNTY, FLORIDA, ALL LYING AND BEING IN SECTION 10, TOWNSHIP 39 SOUTH, RANGE 19 EAST, MORE PARTICULARLY DESCRIBED AS FOLLOWS:
COMMENCE AT THE INTERSECTION OF THE WESTERLY RIGHT-OF-WAY LINE OF JACARANDA BOULEVARD (150' PUBLIC R/W) AND THE SOUTHERLY RIGHT-OF-WAY OF VENICE AVENUE (WIDTH VARIES), ALSO THE NORTHEAST CORNER OF THOSE LANDS DESCRIBED IN OFFICIAL RECORDS INSTRUMENT 2004002681, THENCE ALONG SAID SOUTHERLY RIGHT-OF-WAY LINE FOR THE NEXT 3 CALLS: N 89°22'35"W., 234.27 FEET, THENCE N 00°07'44"E., 4.00 FEET, THENCE N.89°21'23"W., 896.07 FEET FOR A POINT OF BEGINNING; THENCE S 00°36'37"W., 369.50 FEET; THENCE N 89°25'23"W., 194.97 FEET; THENCE N 00°32'08"E., 369.73 FEET, THENCE S.89°21'23"E., 195.67 FEET TO THE POINT OF BEGINNING.

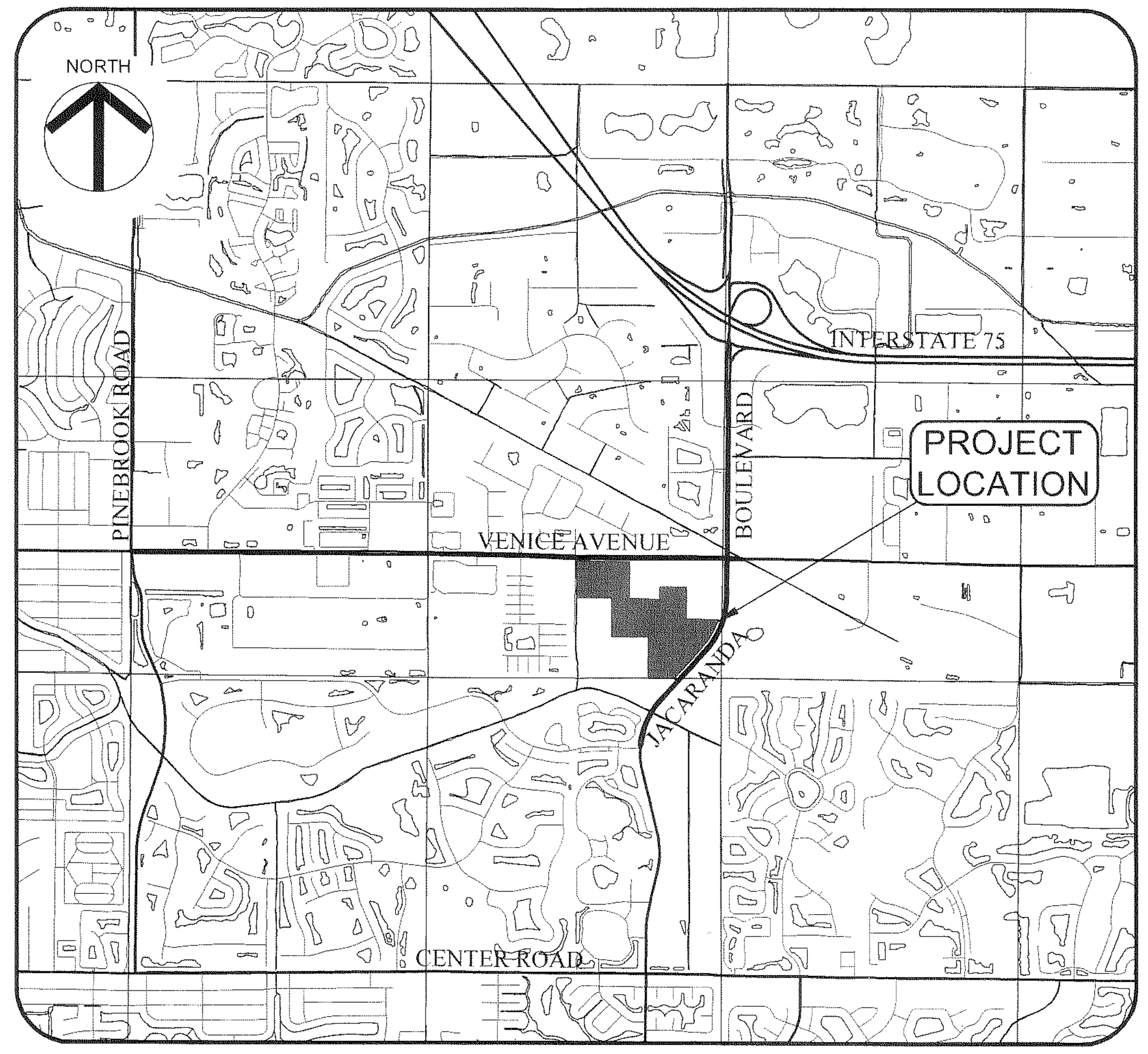

PROJECT LOCATION MAP

NO SCALE

UTILITIES PROVIDING SERVICE

ELECTRIC:
FPL
5657 NORTH MCINTOSH ROAD
SARASOTA, FLORIDA 34233

CABLE TELEVISION:
COMCAST CABLE
5205 FRUITVILLE ROAD
SARASOTA, FLORIDA 34232

TELEPHONE:
CENTURY LINK
1701 RINGLING BLVD.
SARASOTA, FLORIDA 34230

UTILITY LOCATING SERVICE:
SUNSHINE STATE ONE CALL CENTER
PHONE (800) 432-4770
(MINIMUM 48 HOURS NOTICE REQUIRED)

taylor morrison
Homes Inspired by You

DEVELOPED BY:

TAYLOR MORRISON OF FLORIDA, INC.

501 NORTH CATTLEMEN ROAD
SUITE 100
SARASOTA, FL 34232
PHONE: (941) 371-3008 FAX: (941) 371-7998

SHEET INDEX ⚠⚠

1	COVER SHEET
2	AERIAL PLAN
3	MASTER SITE AND PHASING PLAN
4	PRELIMINARY SUBDIVISION PLAN
5	MASTER DRAINAGE PLAN
6	DRAINAGE SITE PLAN (A)
7	DRAINAGE SITE PLAN (B)
8	DRAINAGE SITE PLAN (C)
9	DRAINAGE SITE PLAN (D)
10	DRAINAGE SITE PLAN (E)
11	PAVING, SIGNAGE AND GRADING SITE PLAN (A)
12	PAVING, SIGNAGE AND GRADING SITE PLAN (B)
13	PAVING, SIGNAGE AND GRADING SITE PLAN (C)
14	PAVING, SIGNAGE AND GRADING SITE PLAN (D)
15	PAVING, SIGNAGE AND GRADING SITE PLAN (E)
16	PAVING DETAILS AND TEMPORARY MODEL PARKING LOT DETAIL
17	DRAINAGE DETAILS (A)
18	DRAINAGE DETAILS (B)
19	CROSS SECTIONS (A)
20	CROSS SECTIONS (B)
21	MASTER UTILITY PLAN
22	PLAN AND PROFILE: TERRACINA DRIVE (STA. 1+00.00 TO STA. 11+00.00)
23	PLAN AND PROFILE: TERRACINA DRIVE (STA. 11+00.00 TO STA. 19+00.00)
24	PLAN AND PROFILE: TERRACINA DRIVE (STA. 19+00.00 TO STA. 27+00.00)
25	PLAN AND PROFILE: TERRACINA DRIVE (STA. 27+00.00 TO END)
26	PLAN AND PROFILE: CORDANA COURT (STA. 1+00.00 TO END) ALTESINO COURT (STA. 1+00.00 TO END)
27	PLAN AND PROFILE: VITIANO COURT (STA. 1+00.00 TO END) CORTENOVA COURT (STA. 1+00.00 TO END)
28	PLAN AND PROFILE: CAPULET DRIVE (STA. 1+00.00 TO END)
29	PLAN AND PROFILE: FONTANELLE CIRCLE (STA. 1+00.00 TO STA. 9+00.00)
30	PLAN AND PROFILE: FONTANELLE CIRCLE (STA. 9+00.00 TO END) PUMP STATION (1+00.00 TO END)
31	PLAN AND PROFILE: PORTOPALO DRIVE (STA. 0+00 TO END)
32	PLAN AND PROFILE: CLERMONT ROAD (STA: 1+00 TO END)
33	WATER DISTRIBUTION DETAILS
34	WASTE WATER COLLECTION DETAILS
35	BEST MANAGEMENT PRACTICES PLAN
36	BEST MANAGEMENT PRACTICES DETAILS
37	ZONING INFORMATION DOCUMENTS (ORDINANCE NO. 2008-014)

▇ DENOTES SWFWMD SUBMITTAL

DEVELOPMENT DATA ⚠⚠

TOTAL PROJECT AREA	55.33 ACRES
PRESENT ZONING	RMF-1
ABUTTING ZONING	NORTH: CG / OUE-1 / ROW EAST: CG / ROW SOUTH: RMH / OUE-1 WEST: RMF-1 / OUE-1
CHARACTER AND INTENDED USE	CONVENTIONAL SUBDIVISION
PROPOSED NUMBER OF UNITS SHOWN	165 SINGLE FAMILY (63 DETACHED, 102 ATTACHED VILLAS)
PARCEL DENSITY	2.9 UNITS / ACRE
TOTAL UNITS ALLOWED	331 (6 UNITS / ACRE)

BUILDING INFORMATION

AMENITY BUILDING	CONSTRUCTION TYPE	NO. OF BUILDINGS	NO. OF UNITS
CLUBHOUSE BUILDING	TYPE VI	1	N/A

RESIDENTIAL BUILDINGS

SINGLE FAMILY DETACHED		63	63
SINGLE FAMILY ATTACHED TWIN VILLA		51	102
	RESIDENTIAL TOTAL:	114	165

PARKING CALCULATIONS

TYPE	RATIO	SPACES REQUIRED	SPACES PROVIDED
SINGLE FAMILY UNIT	2 SPACES PER UNIT	330	330**
CLUBHOUSE	1 SPACE PER 250 S.F. (1,194 S.F.)	5	5*
	TOTAL:	335	335*

* 1 HANDICAP SPACE INCLUDED IN TOTAL
** SINGLE FAMILY UNIT PARKING SPACES PROVIDED VIA GARAGE AND/OR DRIVEWAY

LAND USE		
BUILDINGS & AMENITY	9.10 AC.	(16.0%)
ROADWAY, DRIVEWAYS & SIDEWALKS	9.33 AC.	(16.4%)
TOTAL IMPERVIOUS AREA	18.43 AC.	(32.4%)
LAKES AND DETENTION AREAS	9.04 AC.	(15.8%)
WETLANDS AND CONSERVATION AREAS	5.00 AC.	(8.8%)
OPEN SPACE	24.52 AC.	(43.0%)
TOTAL PERVIOUS AREA	38.56 AC.	(67.6%)
TOTAL AREA	56.99 AC.	(100.0%)

WATER: POTABLE WATER SUPPLY WILL BE PROVIDED BY SARASOTA COUNTY UTILITIES.

SEWER: WASTEWATER SERVICES WILL BE PROVIDED BY SARASOTA COUNTY UTILITIES.

GARBAGE: GARBAGE PICKUP WILL BE PROVIDED BY SARASOTA COUNTY WASTE MANAGEMENT VIA CURB-SIDE PICKUP (INCLUDING CLUBHOUSE GARBAGE PICKUP)

ROADWAYS: PRIVATE ROADS WILL BE MAINTAINED BY THE VERONA RESERVE COMMUNITY ASSOCIATION, INC. ACCESS TO THIS PROJECT IS PROVIDED DIRECT FROM JACARANDA BOULEVARD & VENICE AVENUE.

COMMON AREAS: TO BE MAINTAINED BY THE VERONA RESERVE COMMUNITY ASSOCIATION, INC.

EASEMENTS: UTILITY EASEMENTS WILL BE PROVIDED FOR SANITARY SEWER MAINS & WATER MAINS IN ACCORDANCE WITH SARASOTA COUNTY ORDINANCE NO. 99-058 AND THE SARASOTA COUNTY LDR. DRAINAGE EASEMENTS ARE DESIGNATED ON THE PLAN.

TREE LOCATIONS: THE PROPOSED DEVELOPMENT AND ITS ORIENTATION TO THE EXISTING TREES IS SHOWN ON THE AERIAL PHOTOGRAPH. TREES WILL BE PRESERVED WHERE POSSIBLE. TREE REMOVAL PERMIT WILL BE APPLIED FOR PRIOR TO CONSTRUCTION.

FEMA DESIGNATION: THE PROJECT IS LOCATED IN FLOOD ZONE "AE" (MINIMUM FLOOR ELEVATION REQUIRED IS 12.00 NAVD OR 14.22 NGVD) AND FLOOD ZONE "X" (NO MINIMUM FLOOR ELEVATION). THIS IS SHOWN ON FORM PANEL # 332E, DATED 9/3/92.

ENVIRONMENTAL AND SURFACE WATER MANAGEMENT SYSTEM: PRIVATE DRAINAGE SYSTEM WILL BE MAINTAINED BY THE VERONA RESERVE COMMUNITY ASSOCIATION, INC.

STATEMENT OF OWNERSHIP AND UNIFIED CONTROL:
TAYLOR MORRISON OF FLORIDA, INC.
501 NORTH CATTLEMEN ROAD
SUITE 100
SARASOTA, FL 34232
PHONE: (941) 371-3008 FAX: (941) 371-7998

"COMMON AREAS" INCLUDING, BUT LIMITED TO, PRIVATE RECREATION AREAS, OPEN SPACE AND LANDSCAPE AREAS, DRAINAGE AREAS, LAKES, ROADWAYS, SANCTUARIES AND ENTRANCEWAYS SHALL REMAIN UNDER THE UNIFIED OWNERSHIP AND CONTROL OF THE VERONA RESERVE COMMUNITY ASSOCIATION, INC.

RECEIVED DEC 10 2010 SARASOTA COUNTY DEVELOPMENT SERVICES

NOTE: Construction has been authorized with STIPULATIONS. See letter dated JAN 25 2011

CONSTRUCTION AUTHORIZATION DATE: JAN 25 2011
THIS AUTHORIZATION IS SUBJECT TO EXISTING REQUIREMENTS OF SARASOTA COUNTY, FLORIDA AND ANY SPECIAL REQUIREMENTS OF THE BOARD OF COUNTY COMMISSIONERS.

I HEREBY CERTIFY THAT TO THE BEST OF MY KNOWLEDGE AND BELIEF THE DESIGN OF THIS PROJECT, AS PREPARED UNDER MY PERSONAL DIRECTION AND CONTROL COMPLIES WITH ALL APPLICABLE STANDARDS, INCLUDING THE "MANUAL OF UNIFORM MINIMUM STANDARDS FOR DESIGN, CONSTRUCTION AND MAINTENANCE FOR STREETS AND HIGHWAYS" AS ADOPTED BY THE FLORIDA DEPARTMENT OF TRANSPORTATION PURSUANT TO SUBSECTION 335.075(1) AND (4), FLORIDA STAUTES AND THE SARASOTA COUNTY LAND DEVELOPMENT REGULATIONS.

WALDROP ENGINEERING
CIVIL ENGINEERING & LAND DEVELOPMENT CONSULTANTS
28100 BONITA GRANDE DRIVE - SUITE 305 BONITA SPRINGS, FL 34135
P: 239-405-7777 F: 239-405-7899 EMAIL: info@waldropengineering.com

VERONA RESERVE
CLIENT: TAYLOR MORRISON OF FLORIDA, INC.
COVER SHEET

PLAN REVISIONS

1	07/28/10	REVISED PER SARASOTA COUNTY COMMENTS
2	09/14/10	REVISED PER SARASOTA COUNTY COMMENTS
3	10/04/10	REVISED PER SARASOTA COUNTY UTILITY COMMENTS
4	12/14/10	REVISED PER CLIENT & SARASOTA COUNTY UTILITY COMMENTS

FLORIDA CERTIFICATE OF AUTHORIZATION #8636

NICHOLAS B. SPEACH, P.E. 12/15/10
FL CERTIFICATE NO. 70207

SET NUMBER: 225-01-01
SHEET: 1

CENTRAL FILE COPY

10-024924 DS

C:\DOCUME~1\CASEYS~1.WAL\LOCALS~1\Temp\AcPublish_1820\2250101 01.dwg Dec 14, 2010 - 2:17pm

WALDROP ENGINEERING
CIVIL ENGINEERING & LAND DEVELOPMENT CONSULTANTS
28100 BONITA GRANDE DRIVE - SUITE 305 BONITA SPRINGS, FL 34135
P: 239-405-7777 F: 239-405-7899 EMAIL: info@waldropengineering.com

VERONA RESERVE

CLIENT: TAYLOR MORRISON OF FLORIDA, INC.

AERIAL PLAN

PLAN REVISIONS

1	01/28/10	REVISED PER SARASOTA COUNTY COMMENTS

FLORIDA CERTIFICATE OF AUTHORIZATION #6636

NICHOLAS B. SPEACH, P.E.
FL CERTIFICATE NO. 50207
12/13/10

SET NUMBER: 225-01-01

SHEET : 2

J:\225-01 Verona Reserve\AutoCAD\225-01-01 Concurrent Subdivision Plans\Rev04\225010102.dwg Dec 14, 2010 - 2:41pm

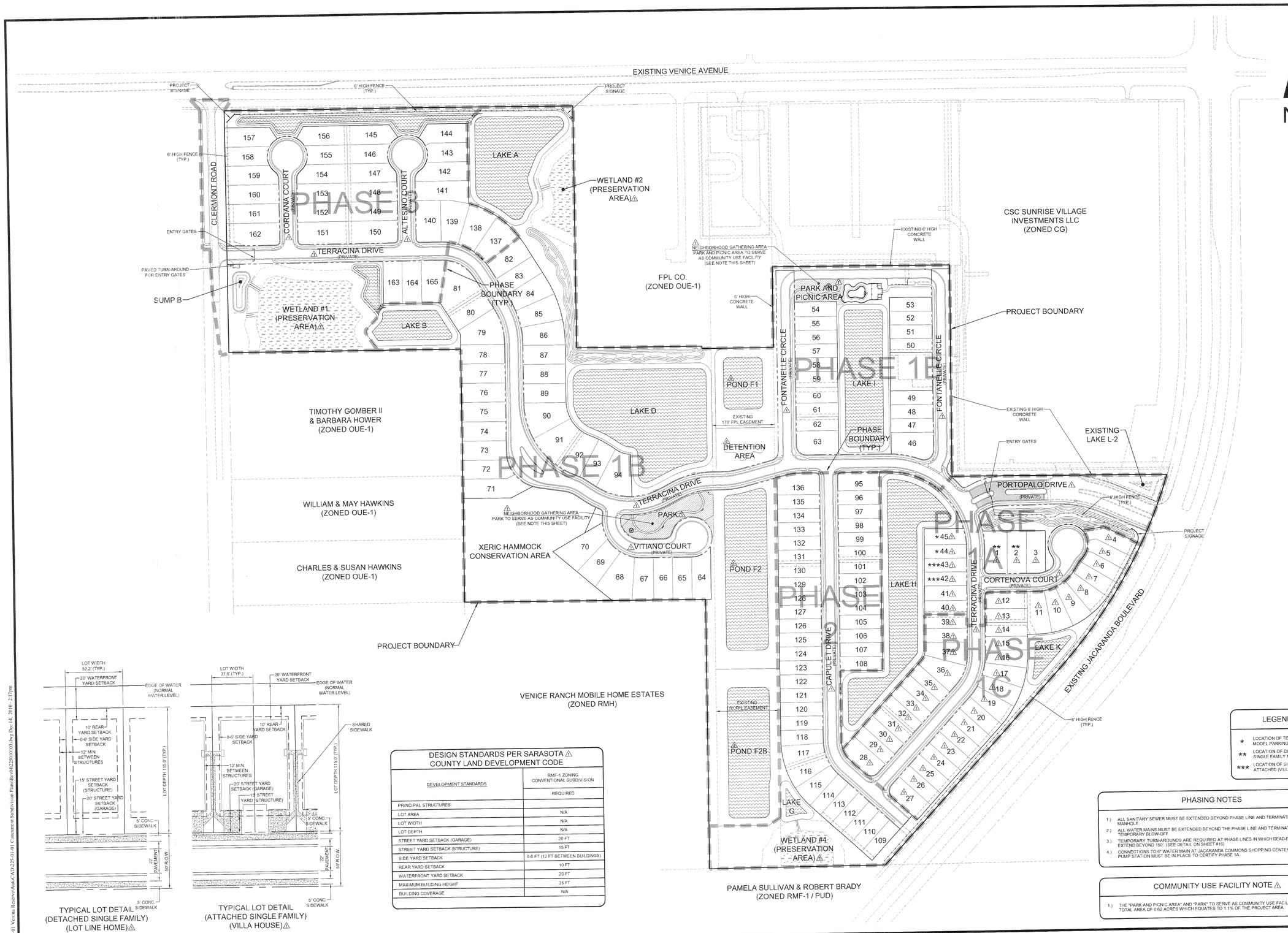

TYPICAL LOT DETAIL (DETACHED SINGLE FAMILY) (LOT LINE HOME)

TYPICAL LOT DETAIL (ATTACHED SINGLE FAMILY) (VILLA HOUSE)

DESIGN STANDARDS PER SARASOTA COUNTY LAND DEVELOPMENT CODE

DEVELOPMENT STANDARDS	RMF-1 ZONING CONVENTIONAL SUBDIVISION REQUIRED
PRINCIPAL STRUCTURES:	
LOT AREA	N/A
LOT WIDTH	N/A
LOT DEPTH	N/A
STREET YARD SETBACK (GARAGE)	20 FT
STREET YARD SETBACK (STRUCTURE)	15 FT
SIDE YARD SETBACK	0-6 FT (12 FT BETWEEN BUILDINGS)
REAR YARD SETBACK	10 FT
WATERFRONT YARD SETBACK	20 FT
MAXIMUM BUILDING HEIGHT	35 FT
BUILDING COVERAGE	N/A

LEGEND

- * LOCATION OF TEMPORARY MODEL PARKING LOT
- ** LOCATION OF DETACHED SINGLE FAMILY MODEL
- *** LOCATION OF SINGLE FAMILY ATTACHED (VILLA HOUSE)

PHASING NOTES

1.) ALL SANITARY SEWER MUST BE EXTENDED BEYOND PHASE LINE AND TERMINATE IN A MANHOLE.
2.) ALL WATER MAINS MUST BE EXTENDED BEYOND THE PHASE LINE AND TERMINATE IN A TEMPORARY BLOW-OFF.
3.) TEMPORARY TURN-AROUNDS ARE REQUIRED AT PHASE LINES IN WHICH DEAD-END ROADS EXTEND BEYOND 150'. (SEE DETAIL ON SHEET #16)
4.) CONNECTIONS TO 6" WATER MAIN AT JACARANDA COMMONS SHOPPING CENTER & EXISTING PUMP STATION MUST BE IN PLACE TO CERTIFY PHASE 1A.

COMMUNITY USE FACILITY NOTE

1.) THE "PARK AND PICNIC AREA" AND "PARK" TO SERVE AS COMMUNITY USE FACILITIES WITH A TOTAL AREA OF 0.62 ACRES WHICH EQUATES TO 1.1% OF THE PROJECT AREA.

WALDROP ENGINEERING
CIVIL ENGINEERING & LAND DEVELOPMENT CONSULTANTS
28100 BONITA GRANDE DRIVE, SUITE 305 BONITA SPRINGS, FL 34135
P: 239-405-7777 F: 239-405-7819 E-MAIL: info@waldropengineering.com

VERONA RESERVE

CLIENT: TAYLOR MORRISON OF FLORIDA, INC.

MASTER SITE & PHASING PLAN

PLAN REVISIONS

2	07/20/10	REVISED PER SARASOTA COUNTY COMMENTS
1	12/14/10	REVISED PER CLIENT COMMENTS

FLORIDA CERTIFICATE OF AUTHORIZATION #8636

NICHOLAS B. SPEACH, P.E. FL CERTIFICATE NO. 70207

12/15/10

SET NUMBER: 225-01-01

SHEET: 3

J:\225-01 Verona Reserve\Auto\CAD\225-01-01 Concurrent Subdivision Plans\Rev04\225010103.dwg Dec 14, 2010 - 2:17pm

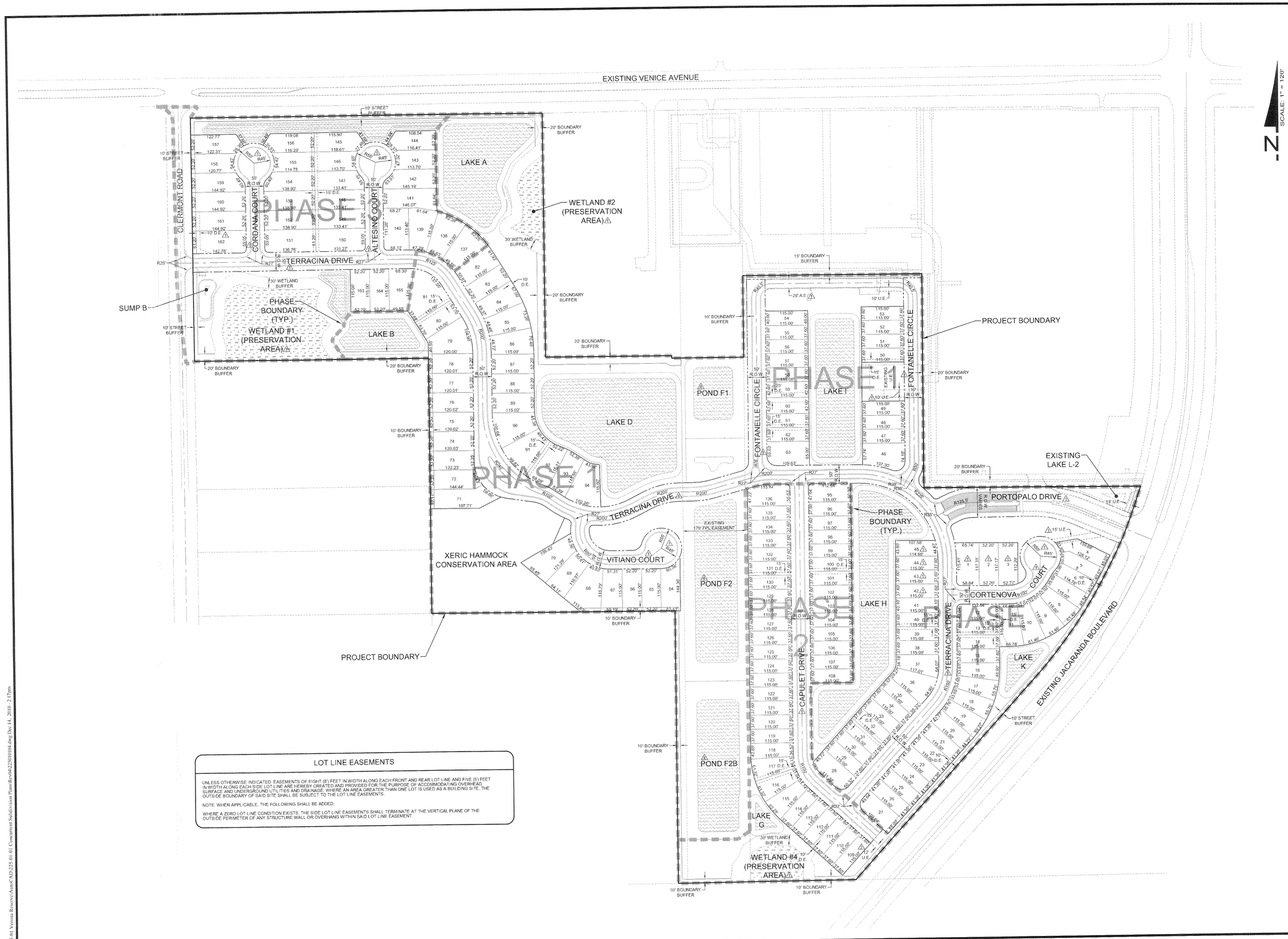

LOT LINE EASEMENTS

UNLESS OTHERWISE INDICATED, EASEMENTS OF EIGHT (8') FEET IN WIDTH ALONG EACH FRONT AND REAR LOT LINE AND FIVE (5') FEET IN WIDTH ALONG EACH SIDE LOT LINE ARE HEREBY CREATED AND PROVIDED FOR THE PURPOSE OF ACCOMMODATING OVERHEAD, SURFACE AND UNDERGROUND UTILITIES AND DRAINAGE. WHERE AN AREA GREATER THAN ONE LOT IS USED AS A BUILDING SITE, THE OUTSIDE BOUNDARY OF SAID SITE SHALL BE SUBJECT TO THE LOT LINE EASEMENTS.

NOTE, WHEN APPLICABLE, THE FOLLOWING SHALL BE ADDED:

WHERE A ZERO LOT LINE CONDITION EXISTS, THE SIDE LOT LINE EASEMENTS SHALL TERMINATE AT THE VERTICAL PLANE OF THE OUTSIDE PERIMETER OF ANY STRUCTURE WALL OR OVERHANG WITHIN SAID LOT LINE EASEMENT.

WALDROP ENGINEERING
CIVIL ENGINEERING & LAND DEVELOPMENT CONSULTANTS
28100 BONITA GRANDE DRIVE - SUITE 305 BONITA SPRINGS, FL 34135
P: 239-405-7777 F: 239-405-7898 EMAIL: info@waldropengineering.com

VERONA RESERVE

CLIENT: TAYLOR MORRISON OF FLORIDA, INC.

PRELIMINARY SUBDIVISION PLAN

PLAN REVISIONS

1	07/29/10	REVISED PER SARASOTA COUNTY COMMENTS
2	09/14/10	REVISED PER SARASOTA COUNTY COMMENTS
3	12/14/10	REVISED PER CLIENT COMMENTS

FLORIDA CERTIFICATE OF AUTHORIZATION #8636

NICHOLAS B. SPEACH, P.E.
FL CERTIFICATE NO. 70507
12/15/10

SET NUMBER: 225-01-01

SHEET : 4

J:\225-01 Verona Reserve\Auto\CAD\225-01-01 Concurrent Subdivision Plans\Rev04\2501H04.dwg Dec 14, 2010 - 2:17pm

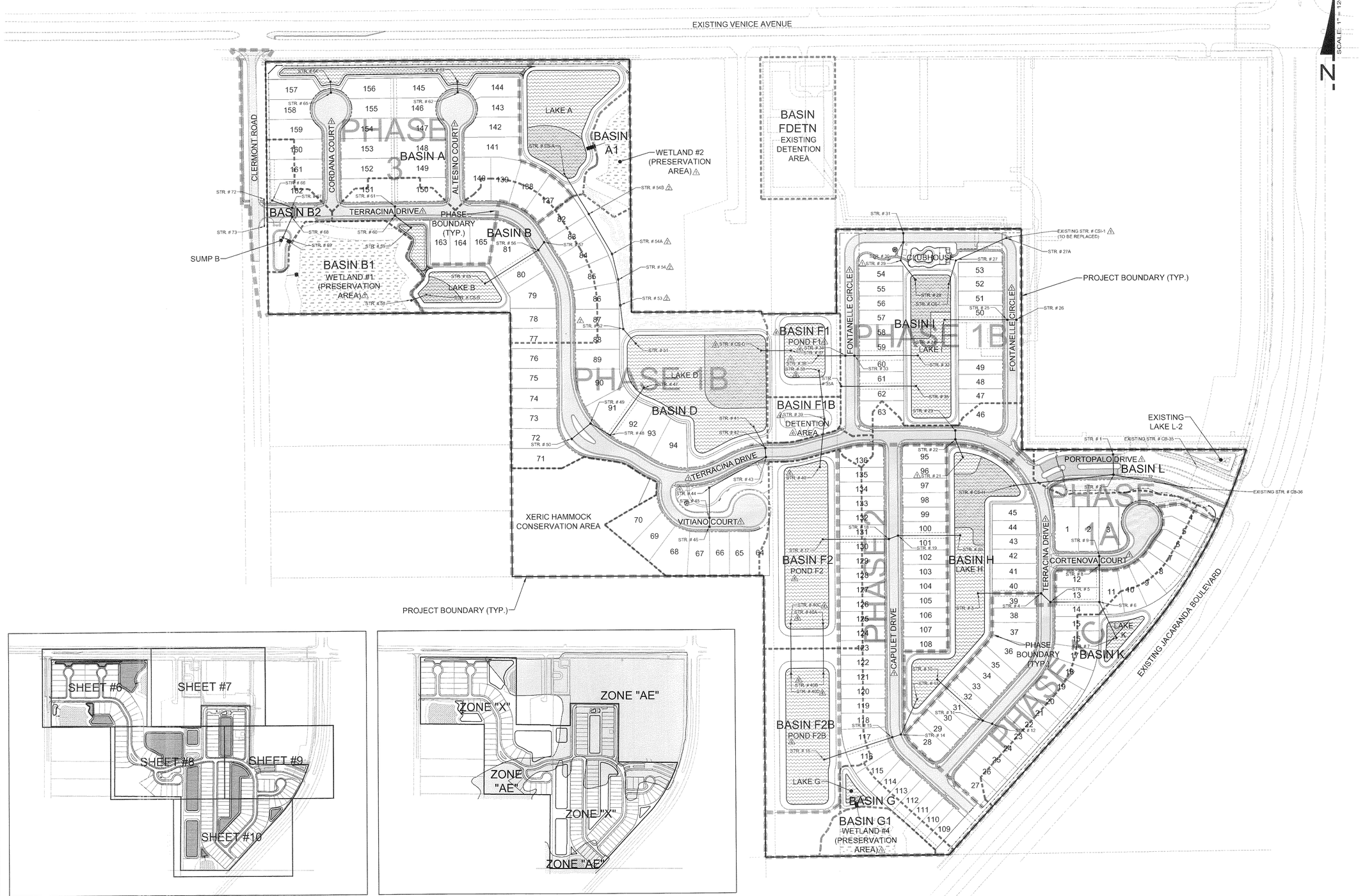

DRAINAGE SITE PLAN
SHEET MAP

FEMA FLOOD MAP
PANEL NUMBER 125144 0332 E, DATED SEPTEMBER 3, 1992

WALDROP ENGINEERING
CIVIL ENGINEERING & LAND DEVELOPMENT CONSULTANTS
28100 BONITA GRANDE DRIVE - SUITE 305 BONITA SPRINGS, FL 34135
P: 239-405-7777 F: 239-405-7899 EMAIL: info@waldropengineering.com

VERONA RESERVE

CLIENT: TAYLOR MORRISON OF FLORIDA, INC.

MASTER DRAINAGE PLAN

PLAN REVISIONS

1	07/28/10	REVISED PER SARASOTA COUNTY COMMENTS
2	09/14/10	REVISED PER SARASOTA COUNTY COMMENTS
3	12/14/10	REVISED PER CLIENT COMMENTS

FLORIDA CERTIFICATE OF AUTHORIZATION #6635

NICHOLAS B. SPEACH, P.E. No 70207

NICHOLAS B. SPEACH, P.E.
FL CERTIFICATE NO. 70207

12/15/10

SET NUMBER: 225-01-01

SHEET : 5

J:\225-01 Verona Reserve\AutoCAD\225-01-01 Concurrent Subdivision Plans\Rev04\225010101.dwg Dec 14, 2010 - 2:17pm

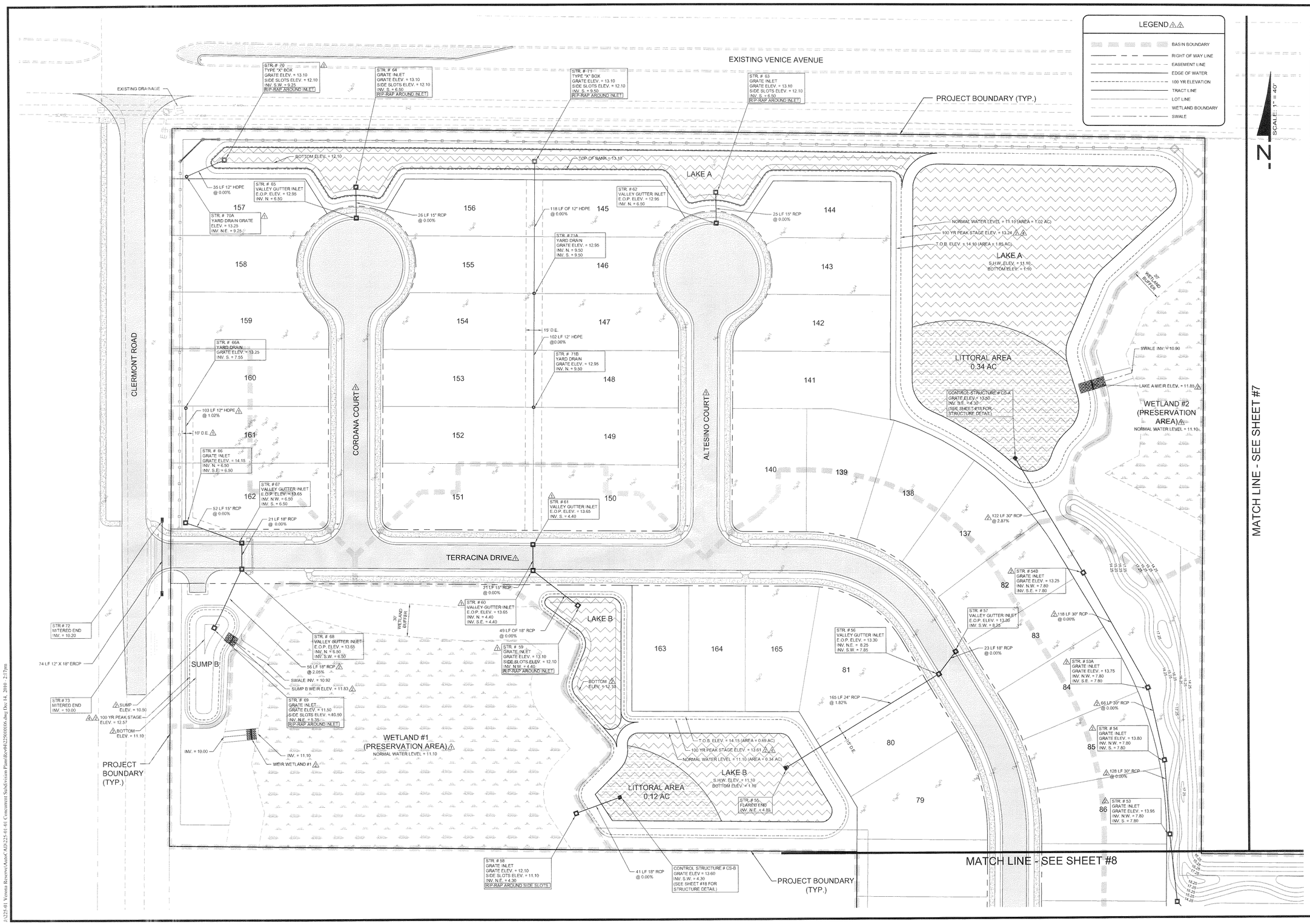

WALDROP ENGINEERING

CIVIL ENGINEERING & LAND DEVELOPMENT CONSULTANTS

28100 BONITA GRANDE DRIVE - SUITE 305 BONITA SPRINGS, FL 34135
P: 239-405-7777 F: 239-405-7899 EMAIL: info@waldropengineering.com

VERONA RESERVE

CLIENT: TAYLOR MORRISON OF FLORIDA, INC.

DRAINAGE SITE PLAN (A)

PLAN REVISIONS

1	07/28/10	REVISED PER SARASOTA COUNTY COMMENTS
2	09/14/10	REVISED PER SARASOTA COUNTY COMMENTS
3	12/14/10	REVISED PER CLIENT COMMENTS

FLORIDA CERTIFICATE OF AUTHORIZATION #3656

NICHOLAS R. SPEACH, P.E.
FL CERTIFICATE NO. 70037
12/15/10

SET NUMBER: 225-01-01

SHEET : 6

I:\225-01 Verona Reserve\Acad\AD225-01-01 Concurrent Subdivision Plans\Rev04\225010106.dwg Dec 14, 2010 - 2:17pm

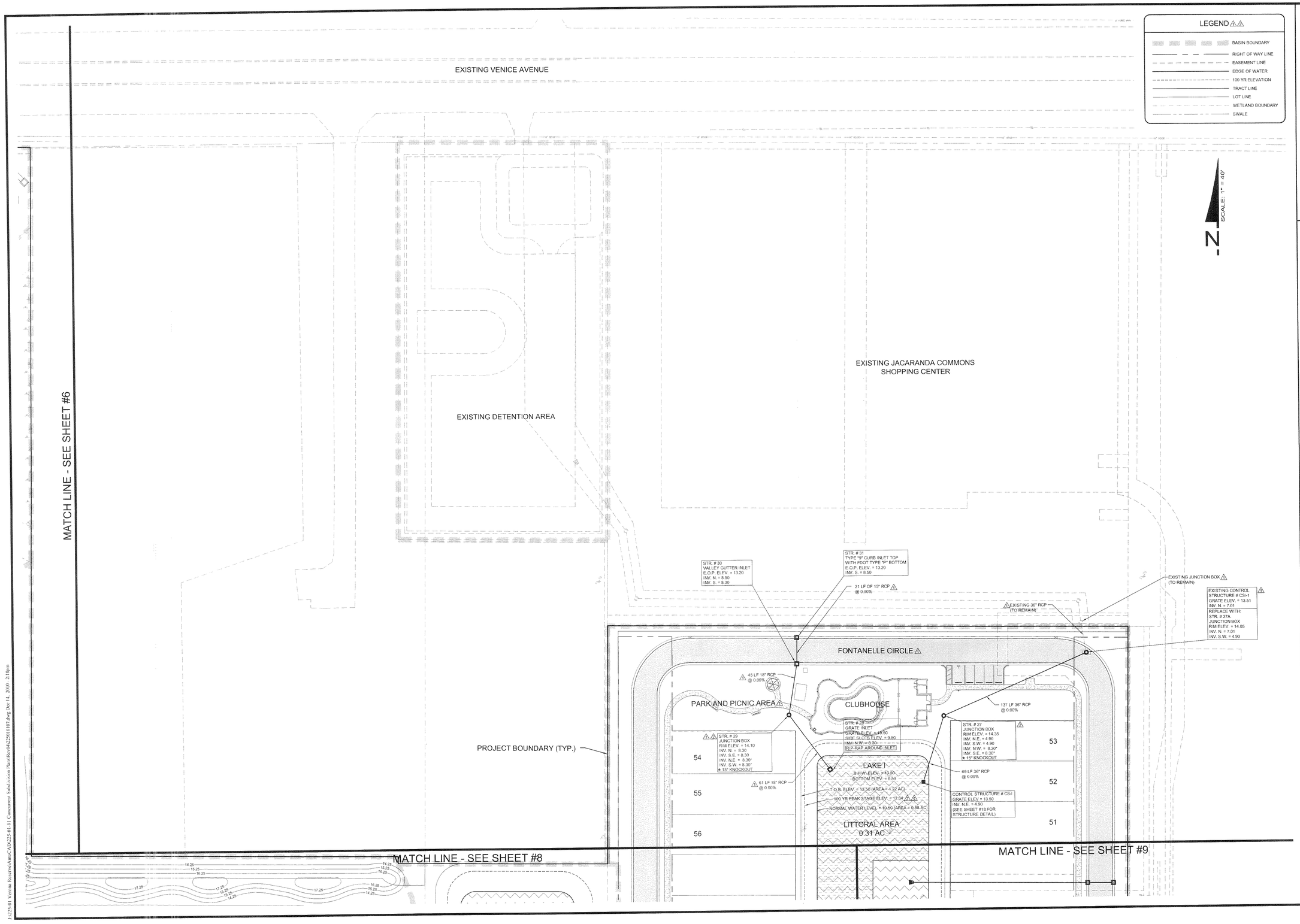

WALDROP ENGINEERING

CIVIL ENGINEERING & LAND DEVELOPMENT CONSULTANTS

29100 BONITA GRANDE DRIVE - SUITE 305 BONITA SPRINGS, FL 34135
P: 239-405-7777 F: 239-405-7599 EMAIL: info@waldropengineering.com

VERONA RESERVE

CLIENT: TAYLOR MORRISON OF FLORIDA, INC.

DRAINAGE SITE PLAN (B)

PLAN REVISIONS

1	07/28/10	REVISED PER SARASOTA COUNTY COMMENTS
2	09/14/10	REVISED PER SARASOTA COUNTY COMMENTS
3	12/14/10	REVISED PER CLIENT COMMENTS

FLORIDA CERTIFICATE OF AUTHORIZATION #6636

NICHOLAS B. SPEACH P.E. No 70207

NICHOLAS B. SPEACH P.E. 12/15/10
FL CERTIFICATE NO. 70207

SET NUMBER: 225-01-01

SHEET : 7

J:\225-01 Verona Reserve\AutoCAD\225-01 Concurrent Subdivision Plan\Re-0\0225010107.dwg Dec 14, 2010 - 2:18pm

MATCH LINE - SEE SHEET #6

MATCH LINE - SEE SHEET #7

MATCH LINE - SEE SHEET #9

MATCH LINE - SEE SHEET #10

59 LF 30" RCP @ 0.00%

50 LF 30" RCP @ 7.00%

STR. # 52 GRATE INLET GRATE ELEV. = 14.00 INV. N. = 7.80 INV. S.E. = 7.80

STR. # 51 FLARED END INV. N.W. = 4.30

CONTROL STRUCTURE # D-D GRATE ELEV. = 13.50 INV. E. = 4.30 (SEE SHEET #18 FOR STRUCTURE DETAIL)

60 LF 30" RCP @ 0.00%

LITTORAL AREA 0.69 AC

LAKE D S.H.W. ELEV. = 11.50 BOTTOM ELEV. = 1.10

STR. # 47 FLARED END INV. S.W. = 4.30

T.O.B. ELEV. = 14.10 (AREA = 2.32 AC)

100 YR PEAK STAGE ELEV. = 13.12

NORMAL WATER LEVEL = 11.10 (AREA = 1.50 AC)

15' D.E.

152 LF 24" RCP @ 0.79%

STR. # 49 VALLEY GUTTER INLET E.O.P. ELEV. = 13.05 INV. S.W. = 7.75 INV. S.E. = 5.50

62 LF 24" RCP @ 0.00%

57 LF 24" RCP @ 0.00%

STR. # 50 VALLEY GUTTER INLET E.O.P. ELEV. = 13.05 INV. N.E. = 7.75

STR. # 48 JUNCTION BOX RIM ELEV. = 13.60 INV. N.W. = 5.50 INV. N.E. = 5.50

STR. # 41 FLARED END INV. S.E. = 4.30

STR. # 42 VALLEY GUTTER INLET E.O.P. ELEV. = 13.05 INV. N.W. = 5.70 INV. S. = 5.80

21 LF 24" RCP @ 0.00%

TERRACINA DRIVE

STR. # 43 VALLEY GUTTER INLET E.O.P. ELEV. = 13.05 INV. N. = 5.80 INV. S.W. = 5.80

166 LF 24" RCP @ 0.00%

STR. # 44 GRATE INLET GRATE ELEV. = 12.90 INV. N.E. = 5.80 INV. S. = 5.80

PARK

76 LF 24" RCP @ 0.00%

VITIANO COURT

21 LF 18" RCP @ 0.00%

STR. # 46 VALLEY GUTTER INLET E.O.P. ELEV. = 13.05 INV. N. = 5.80

STR. # 45 VALLEY GUTTER INLET E.O.P. ELEV. = 13.05 INV. N. = 5.80 INV. S. = 5.80

XERIC HAMMOCK CONSERVATION AREA

PROJECT BOUNDARY (TYP.)

T.O.B. ELEV. = 13.60 (AREA = 0.79 AC)

100 YR PEAK STAGE ELEV. = 12.91

NORMAL WATER LEVEL = 10.50 (AREA = 0.34 AC)

POND F1 S.H.W. ELEV. = 10.50 BOTTOM ELEV. = 4.50

STR. # 37 FLARED END INV. = 4.05

STR. # 34 VALLEY GUTTER INLET E.O.P. ELEV. = 13.20 INV. W. = 4.05 INV. E. = 4.05

STR. # 36 FLARED END INV. = 4.05

71 LF 36" RCP @ 0.00%

STR. # 38 FLARED END INV. = 4.30

126 LF 36" RCP @ 0.00%

EXISTING FPL POLE

FUTURE FPL POLE

STR. # 39 GRATE INLET GRATE ELEV. = 11.50 SIDE SLOTS ELEV. = 10.50 INV. N. = 4.30 INV. S. = 4.30 RIP-RAP AROUND INLET

100 YR PEAK STAGE ELEV. = 12.91

DETENTION AREA

127 LF 36" RCP @ 0.00%

FONTANELLE CIRCLE

STR. # 40 FLARED END INV. = 4.30

NORMAL WATER LEVEL = 10.50 (AREA = 1.12 AC)

100 YR PEAK STAGE ELEV. = 12.91

T.O.B. ELEV. = 13.60 (AREA = 2.00 AC)

POND F2 S.H.W. ELEV. = 10.50 BOTTOM ELEV. = 4.50

STR. # 32 FLARED END INV. W. = 4.05

STR. # 33 VALLEY GUTTER INLET E.O.P. ELEV. = 13.20 INV. W. = 4.05 INV. E. = 4.05

25' D.E.

21 LF 36" RCP @ 0.00%

176 LF 36" RCP @ 0.00%

STR. # 35A JUNCTION BOX RIM ELEV. = 13.08 INV. E. = 4.75 INV. W. = 9.35 * * (24" KNOCK-OUT)

STR. # 35 FLARED END INV. W. = 4.75

196 LF 24" RCP @ 0.00%

15' D.E.

LAKE I S.H.W. ELEV. = 10.60 BOTTOM ELEV. = 0.50

T.O.B. ELEV. = 10.50 (AREA = 1.22 AC)

100 YR PEAK STAGE ELEV. = 12.94

NORMAL WATER LEVEL = 10.50 (AREA = 0.88 AC)

CAPULET DRIVE

23 LF 24" RCP @ 0.00%

STR. # 18 VALLEY GUTTER INLET E.O.P. ELEV. = 13.20 INV. W. = 5.40 INV. N.E. = 3.40

STR. # 19 VALLEY GUTTER INLET E.O.P. ELEV. = 13.20 INV. S.W. = 3.40 INV. E. = 5.40

163 LF 24" RCP @ 0.00%

173 LF 24" RCP @ 0.00%

STR. # 17 FLARED END INV. = 3.40

15' D.E.

15' D.E.

SCALE: 1" = 40'

LEGEND

- BASIN BOUNDARY
- RIGHT OF WAY LINE
- EASEMENT LINE
- EDGE OF WATER
- 100 YR ELEVATION
- TRACT LINE
- LOT LINE
- WETLAND BOUNDARY
- SWALE

WALDROP ENGINEERING

CIVIL ENGINEERING & LAND DEVELOPMENT CONSULTANTS

28100 BONITA GRANDE DRIVE - SUITE 305 BONITA SPRINGS, FL 34135

P: 239-405-7777 F: 239-405-7899 EMAIL: info@waldropengineering.com

VERONA RESERVE

CLIENT: TAYLOR MORRISON OF FLORIDA, INC.

DRAINAGE SITE PLAN (C)

PLAN REVISIONS

1	07/28/10	REVISED PER SARASOTA COUNTY COMMENTS
2	09/14/10	REVISED PER SARASOTA COUNTY COMMENTS
3	12/16/10	REVISED PER CLIENT COMMENTS

FLORIDA CERTIFICATE OF AUTHORIZATION 06636

NICHOLAS B. SPEACH, P.E. FL CERTIFICATE NO. 70207 12/5/10

SET NUMBER: 225-01-01

SHEET : 8

J:\225-01 Verona Reserve\AutoCAD\225-01-01 Concurrent Subdivision Plans\Rezoning\08\225-01-08 Dec 14, 2010 - 2:10pm

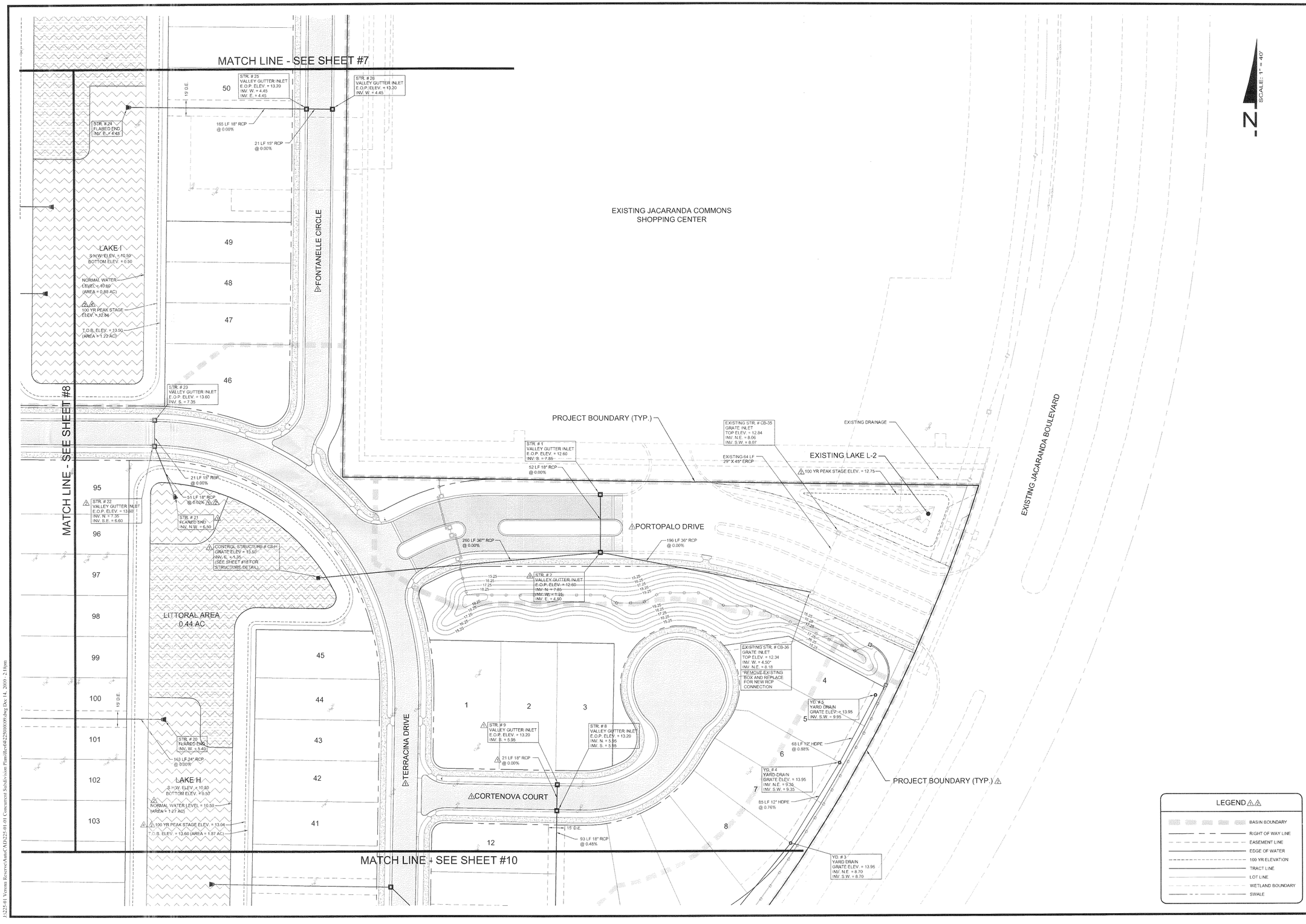

LEGEND

- BASIN BOUNDARY
- RIGHT OF WAY LINE
- EASEMENT LINE
- EDGE OF WATER
- 100 YR ELEVATION
- TRACT LINE
- LOT LINE
- WETLAND BOUNDARY
- SWALE

WALDROP ENGINEERING
CIVIL ENGINEERING & LAND DEVELOPMENT CONSULTANTS
28100 BONITA GRANDE DRIVE - SUITE 305 BONITA SPRINGS, FL 34135
P: 239-405-7777 F: 239-405-7899 EMAIL: info@waldropengineering.com

VERONA RESERVE

CLIENT: TAYLOR MORRISON OF FLORIDA, INC.

DRAINAGE SITE PLAN (D)

PLAN REVISIONS

1	07/28/10	REVISED PER SARASOTA COUNTY COMMENTS
2	09/14/10	REVISED PER SARASOTA COUNTY COMMENTS
3	12/14/10	REVISED PER CLIENT COMMENTS

FLORIDA CERTIFICATE OF AUTHORIZATION #6636

NICHOLAS B. SPEACH, P.E.
FL CERTIFICATE NO. 70207

12/15/10

SET NUMBER: 225-01-01

SHEET : 9

J:\225-01 Verona Reserve\Auto\CAD\225-01-01 Concurrent Subdivision Plan\Rel\0422501001.dwg Dec 14, 2010 - 2:10pm

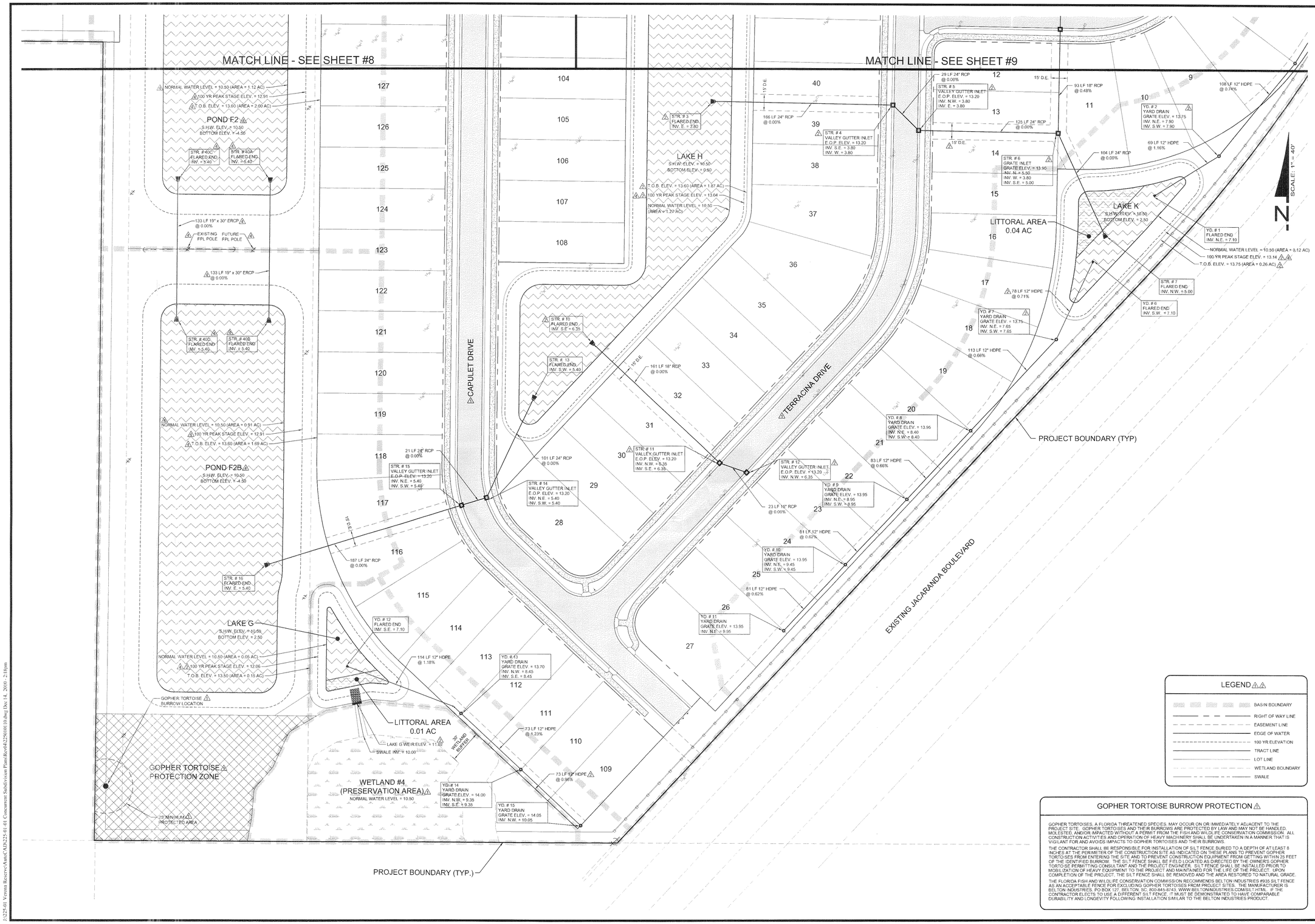

LEGEND

- BASIN BOUNDARY
- RIGHT OF WAY LINE
- EASEMENT LINE
- EDGE OF WATER
- 100 YR ELEVATION
- TRACT LINE
- LOT LINE
- WETLAND BOUNDARY
- SWALE

GOPHER TORTOISE BURROW PROTECTION

GOPHER TORTOISES, A FLORIDA THREATENED SPECIES, MAY OCCUR ON OR IMMEDIATELY ADJACENT TO THE PROJECT SITE. GOPHER TORTOISES AND THEIR BURROWS ARE PROTECTED BY LAW AND MAY NOT BE HANDLED, MOLESTED, AND/OR IMPACTED WITHOUT A PERMIT FROM THE FISH AND WILDLIFE CONSERVATION COMMISSION. ALL CONSTRUCTION ACTIVITIES AND OPERATION OF HEAVY MACHINERY SHALL BE UNDERTAKEN IN A MANNER THAT IS VIGILANT FOR AND AVOIDS IMPACTS TO GOPHER TORTOISES AND THEIR BURROWS.

THE CONTRACTOR SHALL BE RESPONSIBLE FOR INSTALLATION OF SILT FENCE BURIED TO A DEPTH OF AT LEAST 8 INCHES AT THE PERIMETER OF THE CONSTRUCTION SITE AS INDICATED ON THESE PLANS TO PREVENT GOPHER TORTOISES FROM ENTERING THE SITE AND TO PREVENT CONSTRUCTION EQUIPMENT FROM GETTING WITHIN 25 FEET OF THE IDENTIFIED BURROW. THE SILT FENCE SHALL BE FIELD LOCATED AS DIRECTED BY THE OWNERS GOPHER TORTOISE PERMITTING CONSULTANT AND THE PROJECT ENGINEER. SILT FENCE SHALL BE INSTALLED PRIOR TO MOBILIZATION OF HEAVY EQUIPMENT TO THE PROJECT AND MAINTAINED FOR THE LIFE OF THE PROJECT. UPON COMPLETION OF THE PROJECT, THE SILT FENCE SHALL BE REMOVED AND THE AREA RESTORED TO NATURAL GRADE.

THE FLORIDA FISH AND WILDLIFE CONSERVATION COMMISSION RECOMMENDS BELTON INDUSTRIES #935 SILT FENCE AS AN ACCEPTABLE FENCE FOR EXCLUDING GOPHER TORTOISES FROM PROJECT SITES. THE MANUFACTURER IS BELTON INDUSTRIES, PO BOX 127, BELTON, SC, 800-845-8743, WWW.BELTONINDUSTRIES.COM/SILT.HTML. IF THE CONTRACTOR ELECTS TO USE A DIFFERENT SILT FENCE, IT MUST BE DEMONSTRATED TO HAVE COMPARABLE DURABILITY AND LONGEVITY FOLLOWING INSTALLATION SIMILAR TO THE BELTON INDUSTRIES PRODUCT.

WALDROP ENGINEERING
CIVIL ENGINEERING & LAND DEVELOPMENT CONSULTANTS
25100 BONITA GRANDE DRIVE - SUITE 305 BONITA SPRINGS, FL 34135
P: 239-405-7777 F: 239-405-7899 EMAIL: info@waldropengineering.com

VERONA RESERVE

CLIENT: TAYLOR MORRISON OF FLORIDA, INC.

DRAINAGE SITE PLAN (E)

PLAN REVISIONS

3	02/28/10	REVISED PER SARASOTA COUNTY COMMENTS
2	09/24/10	REVISED PER SARASOTA COUNTY COMMENTS
1	12/14/10	REVISED PER CLIENT COMMENTS

FLORIDA CERTIFICATE OF AUTHORIZATION #6636

NICHOLAS B. SPEACH, P.E.
FL CERTIFICATE NO. 70297
12/15/10

SET NUMBER: 225-01-01

SHEET: 10

J:\225-01 Verona Reserve\Auto\CAD\225-01-01 Concurrent Subdivision Plans\Rev04\225010101.dwg Dec 14, 2010 - 2:18pm

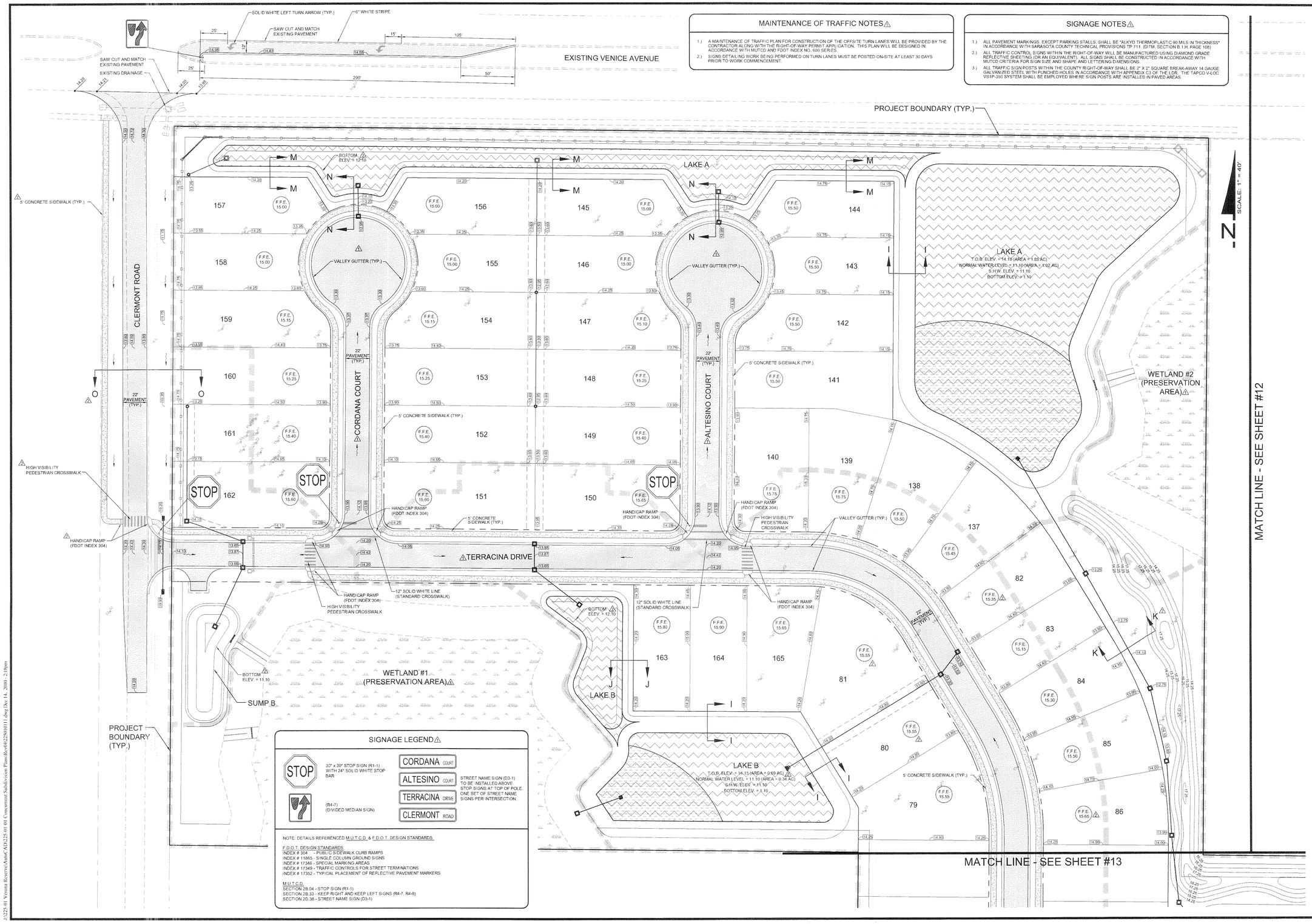

MAINTENANCE OF TRAFFIC NOTES

1.) A MAINTENANCE OF TRAFFIC PLAN FOR CONSTRUCTION OF THE OFFSITE TURN LANES WILL BE PROVIDED BY THE CONTRACTOR ALONG WITH THE RIGHT-OF-WAY PERMIT APPLICATION. THIS PLAN WILL BE DESIGNED IN ACCORDANCE WITH MUTCD AND FDOT INDEX NO. 600 SERIES.

2.) SIGNS DETAILING WORK BEING PERFORMED ON TURN LANES MUST BE POSTED ON-SITE AT LEAST 30 DAYS PRIOR TO WORK COMMENCEMENT.

SIGNAGE NOTES

1.) ALL PAVEMENT MARKINGS, EXCEPT PARKING STALLS, SHALL BE "ALKYD THERMOPLASTIC 90 MILS IN THICKNESS" IN ACCORDANCE WITH SARASOTA COUNTY TECHNICAL PROVISIONS TP 711. (DTM. SECTION 8.1.H. PAGE 108)

2.) ALL TRAFFIC CONTROL SIGNS WITHIN THE RIGHT-OF-WAY WILL BE MANUFACTURED USING DIAMOND GRADE REFLECTIVE SHEETING (OR AN EQUIVALENT). ALL SIGNS SHALL BE CONSTRUCTED IN ACCORDANCE WITH MUTCD CRITERIA FOR SIGN SIZE AND SHAPE AND LETTERING DIMENSIONS.

3.) ALL TRAFFIC SIGN POSTS WITHIN THE COUNTY RIGHT-OF-WAY SHALL BE 2" X 2" SQUARE BREAK-AWAY 14 GAUGE GALVANIZED STEEL WITH PUNCHED HOLES IN ACCORDANCE WITH APPENDIX C3 OF THE LDR. THE TAPCO V-LOC VS1P-350 SYSTEM SHALL BE EMPLOYED WHERE SIGN POSTS ARE INSTALLED IN PAVED AREAS.

SIGNAGE LEGEND

STOP — 30" x 30" STOP SIGN (R1-1) WITH 24" SOLID WHITE STOP BAR	CORDANA COURT
(R4-7) (DIVIDED MEDIAN SIGN)	ALTESINO COURT
	TERRACINA DRIVE
	CLERMONT ROAD

STREET NAME SIGN (D3-1) TO BE INSTALLED ABOVE STOP SIGNS AT TOP OF POLE. ONE SET OF STREET NAME SIGNS PER INTERSECTION.

NOTE: DETAILS REFERENCED M.U.T.C.D. & F.D.O.T. DESIGN STANDARDS

F.D.O.T. DESIGN STANDARDS
INDEX # 304 - PUBLIC SIDEWALK CURB RAMPS
INDEX # 11865 - SINGLE COLUMN GROUND SIGNS
INDEX # 17346 - SPECIAL MARKING AREAS
INDEX # 17349 - TRAFFIC CONTROLS FOR STREET TERMINATIONS
INDEX # 17352 - TYPICAL PLACEMENT OF REFLECTIVE PAVEMENT MARKERS

M.U.T.C.D.
SECTION 2B.04 - STOP SIGN (R1-1)
SECTION 2B.33 - KEEP RIGHT AND KEEP LEFT SIGNS (R4-7, R4-8)
SECTION 2D.38 - STREET NAME SIGN (D3-1)

WALDROP ENGINEERING
CIVIL ENGINEERING & LAND DEVELOPMENT CONSULTANTS
25100 BONITA GRANDE DRIVE - SUITE 305 BONITA SPRINGS, FL 34135
P: 239-405-7777 F: 239-405-7599 EMAIL: info@waldropengineering.com

VERONA RESERVE

CLIENT: TAYLOR MORRISON OF FLORIDA, INC.

PAVING, SIGNAGE & GRADING SITE PLAN (A)

PLAN REVISIONS

1	07/28/10	REVISED PER SARASOTA COUNTY COMMENTS
2	09/14/10	REVISED PER SARASOTA COUNTY COMMENTS
3		
4		
5		
6		
7		
8		
9		
10		

FLORIDA CERTIFICATE OF AUTHORIZATION #8636

NICHOLAS B. SPEACHT, P.E. No 70207 STATE OF FLORIDA LICENSED

NICHOLAS B. SPEACHT, P.E.
FL CERTIFICATE NO. 70207

7/21/10

SET NUMBER: 225-01-01

SHEET : 11

I:\225-01 Verona Reserve\AutoCAD\225-01-01 Concurrent Subdivision Plans\Rev04\225001011.dwg Dec 14, 2010 - 2:18pm

SIGNAGE NOTES ⚠

1.) ALL PAVEMENT MARKINGS, EXCEPT PARKING STALLS, SHALL BE "ALKYD THERMOPLASTIC 90 MILS IN THICKNESS" IN ACCORDANCE WITH SARASOTA COUNTY TECHNICAL PROVISIONS TP 711, (DTM, SECTION B.1.H, PAGE 108).

2.) ALL TRAFFIC CONTROL SIGNS WITHIN THE RIGHT-OF-WAY WILL BE MANUFACTURED USING DIAMOND GRADE REFLECTIVE SHEETING (OR AN EQUIVALENT). ALL SIGNS SHALL BE CONSTRUCTED IN ACCORDANCE WITH MUTCD CRITERIA FOR SIGN SIZE AND SHAPE AND LETTERING DIMENSIONS.

3.) ALL TRAFFIC SIGN POSTS WITHIN THE COUNTY RIGHT-OF-WAY SHALL BE 2" X 2" SQUARE BREAK-AWAY 14 GAUGE GALVANIZED STEEL WITH PUNCHED HOLES IN ACCORDANCE WITH APPENDIX C3 OF THE LDR. THE TAPCO V-LOC VS1P-350 SYSTEM SHALL BE EMPLOYED WHERE SIGN POSTS ARE INSTALLED IN PAVED AREAS.

MAINTENANCE OF TRAFFIC NOTES ⚠

1.) A MAINTENANCE OF TRAFFIC PLAN FOR CONSTRUCTION OF THE OFFSITE TURN LANES WILL BE PROVIDED BY THE CONTRACTOR ALONG WITH THE RIGHT-OF-WAY PERMIT APPLICATION. THIS PLAN WILL BE DESIGNED IN ACCORDANCE WITH MUTCD AND FDOT INDEX NO. 600 SERIES.

2.) SIGNS DETAILING WORK BEING PERFORMED ON TURN LANES MUST BE POSTED ON-SITE AT LEAST 30 DAYS PRIOR TO WORK COMMENCEMENT.

SIGNAGE LEGEND

(FDOT INDEX # 17355)
(HANDICAP PARKING SIGN)

NOTE: DETAILS REFERENCED M.U.T.C.D. & F.D.O.T. DESIGN STANDARDS.

F.D.O.T. DESIGN STANDARDS
INDEX # 304 - PUBLIC SIDEWALK CURB RAMPS
INDEX # 11865 - SINGLE COLUMN GROUND SIGNS
INDEX # 17346 - SPECIAL MARKING AREAS
INDEX # 17349 - TRAFFIC CONTROLS FOR STREET TERMINATIONS
INDEX # 17352 - TYPICAL PLACEMENT OF REFLECTIVE PAVEMENT MARKERS

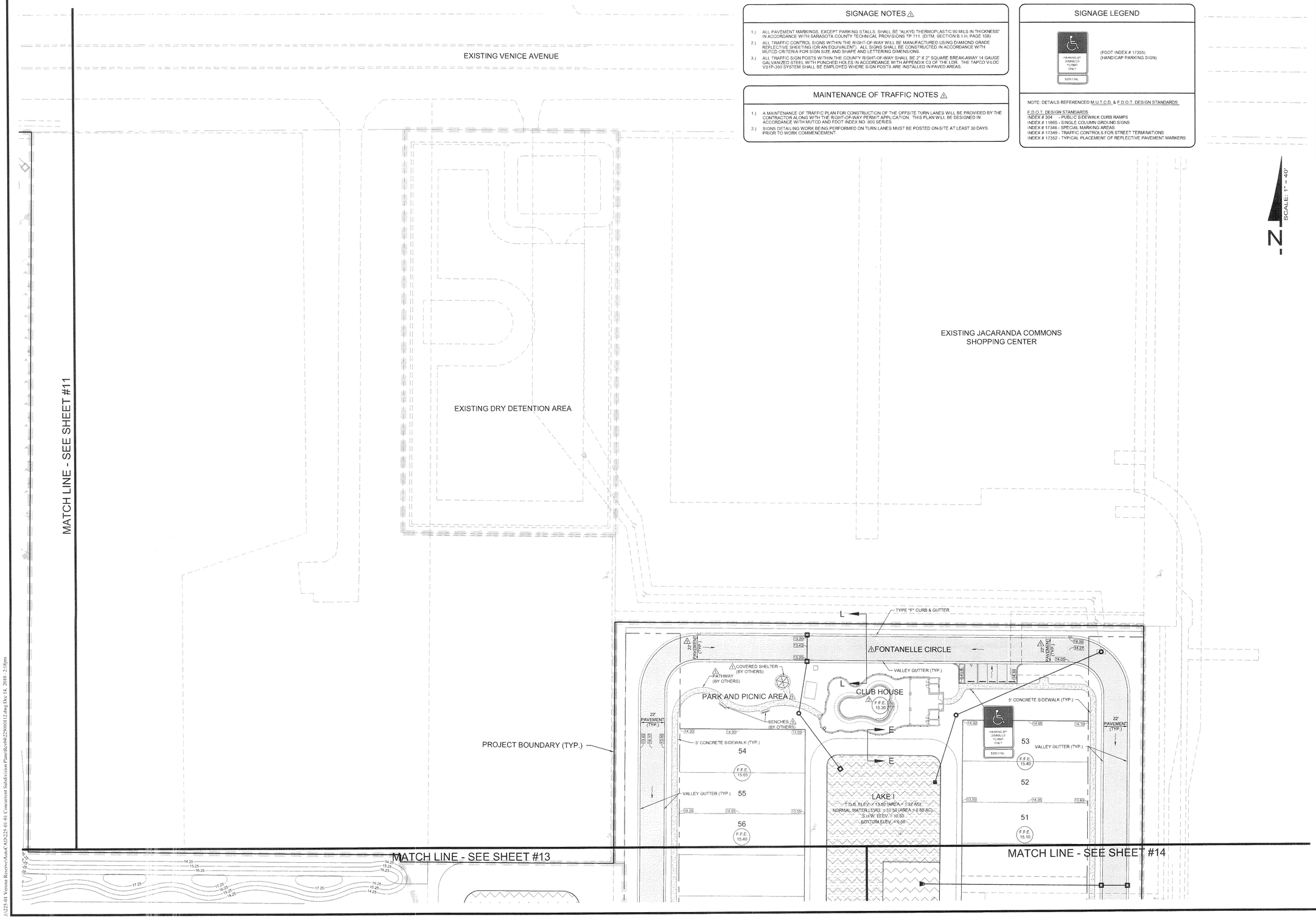

WALDROP ENGINEERING
CIVIL ENGINEERING & LAND DEVELOPMENT CONSULTANTS
25100 BONITA GRANDE DRIVE - SUITE 305 BONITA SPRINGS, FL 34135
P: 239-405-7777 F: 239-405-7599 EMAIL: info@waldropengineering.com

VERONA RESERVE

CLIENT: TAYLOR MORRISON OF FLORIDA, INC.

PAVING, SIGNAGE & GRADING SITE PLAN (B)

PLAN REVISIONS

2	07/28/10	REVISED PER SARASOTA COUNTY COMMENTS
1	09/14/10	REVISED PER SARASOTA COUNTY COMMENTS

FLORIDA CERTIFICATE OF AUTHORIZATION #6636

NICHOLAS B. SPEACH, P.E.
FL CERTIFICATE NO. 70207
12/15/10

SET NUMBER: 225-01-01

SHEET : 12

J:\225-01 Verona Reserve\AutoCAD\225-01-01 Concurrent Subdivision Plan\Rev04\250101 12.dwg Dec 14, 2010 - 2:18pm

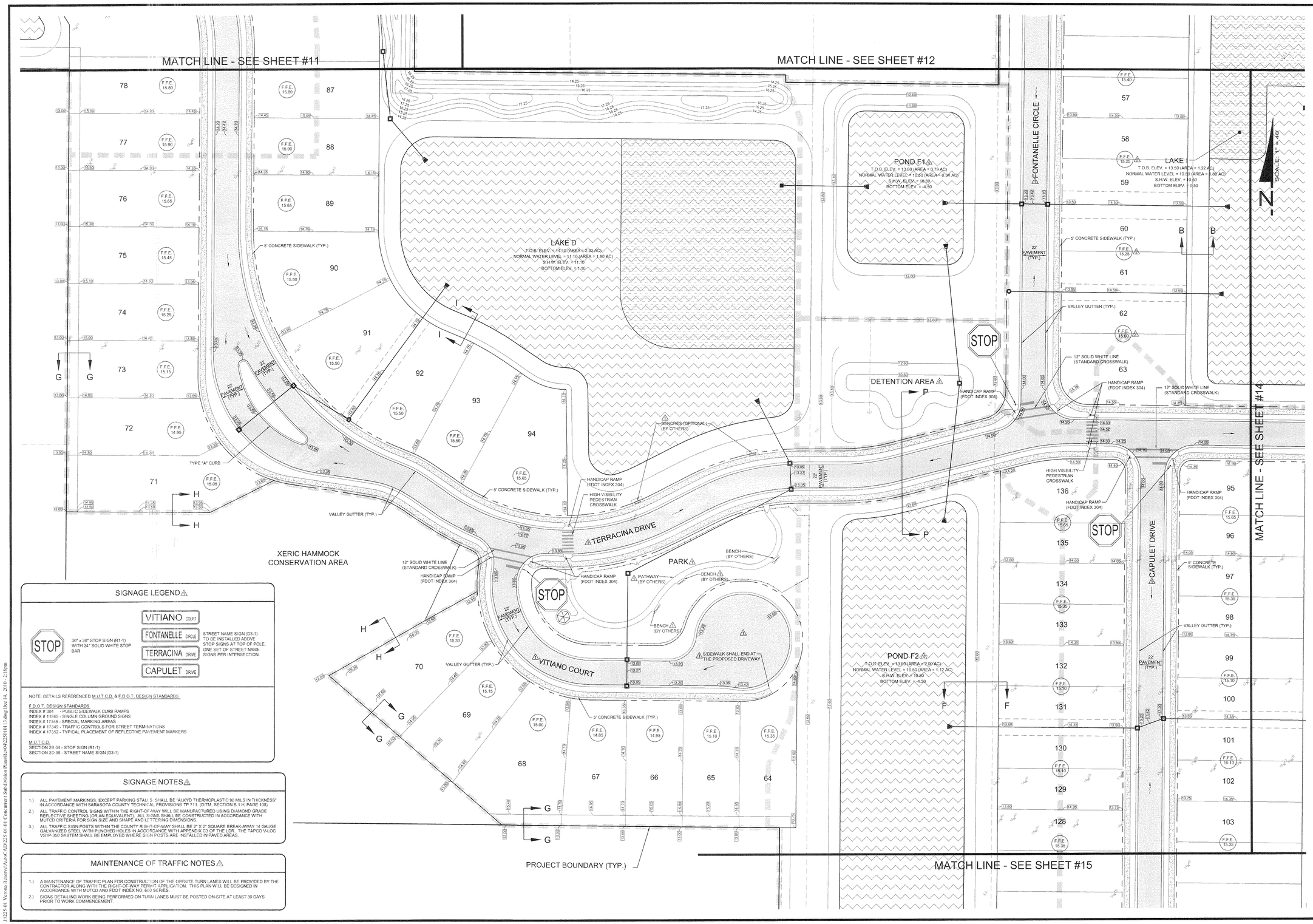

SIGNAGE LEGEND

STOP — 30" x 30" STOP SIGN (R1-1) WITH 24" SOLID WHITE STOP BAR

VITIANO COURT
FONTANELLE CIRCLE
TERRACINA DRIVE
CAPULET DRIVE

STREET NAME SIGN (D3-1) TO BE INSTALLED ABOVE STOP SIGNS AT TOP OF POLE. ONE SET OF STREET NAME SIGNS PER INTERSECTION.

NOTE: DETAILS REFERENCED M.U.T.C.D. & F.D.O.T. DESIGN STANDARDS

F.D.O.T. DESIGN STANDARDS
INDEX # 304 - PUBLIC SIDEWALK CURB RAMPS
INDEX # 11865 - SINGLE COLUMN GROUND SIGNS
INDEX # 17346 - SPECIAL MARKING AREAS
INDEX # 17349 - TRAFFIC CONTROLS FOR STREET TERMINATIONS
INDEX # 17352 - TYPICAL PLACEMENT OF REFLECTIVE PAVEMENT MARKERS

M.U.T.C.D.
SECTION 2B.04 - STOP SIGN (R1-1)
SECTION 2D.38 - STREET NAME SIGN (D3-1)

SIGNAGE NOTES

1.) ALL PAVEMENT MARKINGS, EXCEPT PARKING STALLS, SHALL BE "ALKYD THERMOPLASTIC 90 MILS IN THICKNESS" IN ACCORDANCE WITH SARASOTA COUNTY TECHNICAL PROVISIONS TP 711. (D/TM, SECTION B.1.H, PAGE 108).

2.) ALL TRAFFIC CONTROL SIGNS WITHIN THE RIGHT-OF-WAY WILL BE MANUFACTURED USING DIAMOND GRADE REFLECTIVE SHEETING (OR AN EQUIVALENT). ALL SIGNS SHALL BE CONSTRUCTED IN ACCORDANCE WITH MUTCD CRITERIA FOR SIGN SIZE AND SHAPE AND LETTERING DIMENSIONS.

3.) ALL TRAFFIC SIGN POSTS WITHIN THE COUNTY RIGHT-OF-WAY SHALL BE 2" X 2" SQUARE BREAK-AWAY 14 GAUGE GALVANIZED STEEL WITH PUNCHED HOLES IN ACCORDANCE WITH APPENDIX C3 OF THE LDR. THE TAPCO VULOC VS1P-350 SYSTEM SHALL BE EMPLOYED WHERE SIGN POSTS ARE INSTALLED IN PAVED AREAS.

MAINTENANCE OF TRAFFIC NOTES

1.) A MAINTENANCE OF TRAFFIC PLAN FOR CONSTRUCTION OF THE OFFSITE TURN LANES WILL BE PROVIDED BY THE CONTRACTOR ALONG WITH THE RIGHT-OF-WAY PERMIT APPLICATION. THIS PLAN WILL BE DESIGNED IN ACCORDANCE WITH MUTCD AND FDOT INDEX NO. 600 SERIES.

2.) SIGNS DETAILING WORK BEING PERFORMED ON TURN LANES MUST BE POSTED ON-SITE AT LEAST 30 DAYS PRIOR TO WORK COMMENCEMENT.

WALDROP ENGINEERING
CIVIL ENGINEERING & LAND DEVELOPMENT CONSULTANTS
28100 BONITA GRANDE DRIVE - SUITE 305 BONITA SPRINGS, FL 34135
P: 239-405-7777 F: 239-405-7899 E-MAIL: info@waldropengineering.com

VERONA RESERVE

CLIENT: TAYLOR MORRISON OF FLORIDA, INC.

PAVING, SIGNAGE & GRADING SITE PLAN (C)

PLAN REVISIONS

1	07/28/10	REVISED PER SARASOTA COUNTY COMMENTS
2	09/14/10	REVISED PER SARASOTA COUNTY COMMENTS
3	12/14/10	REVISED PER CLIENT COMMENTS

FLORIDA CERTIFICATE OF AUTHORIZATION #6636

NICHOLAS B. SPEACH LICENSE No 70207

NICHOLAS B. SPEACH, P.E.
FL CERTIFICATE NO. 70207
12/9/10

SET NUMBER: 225-01-01

SHEET: 13

J:\225-01 Verona Reserve\AutoCAD\225-01-01 Concurrent Subdivision Plans\Rev04\225010113.dwg Dec 14, 2010 - 2:18pm

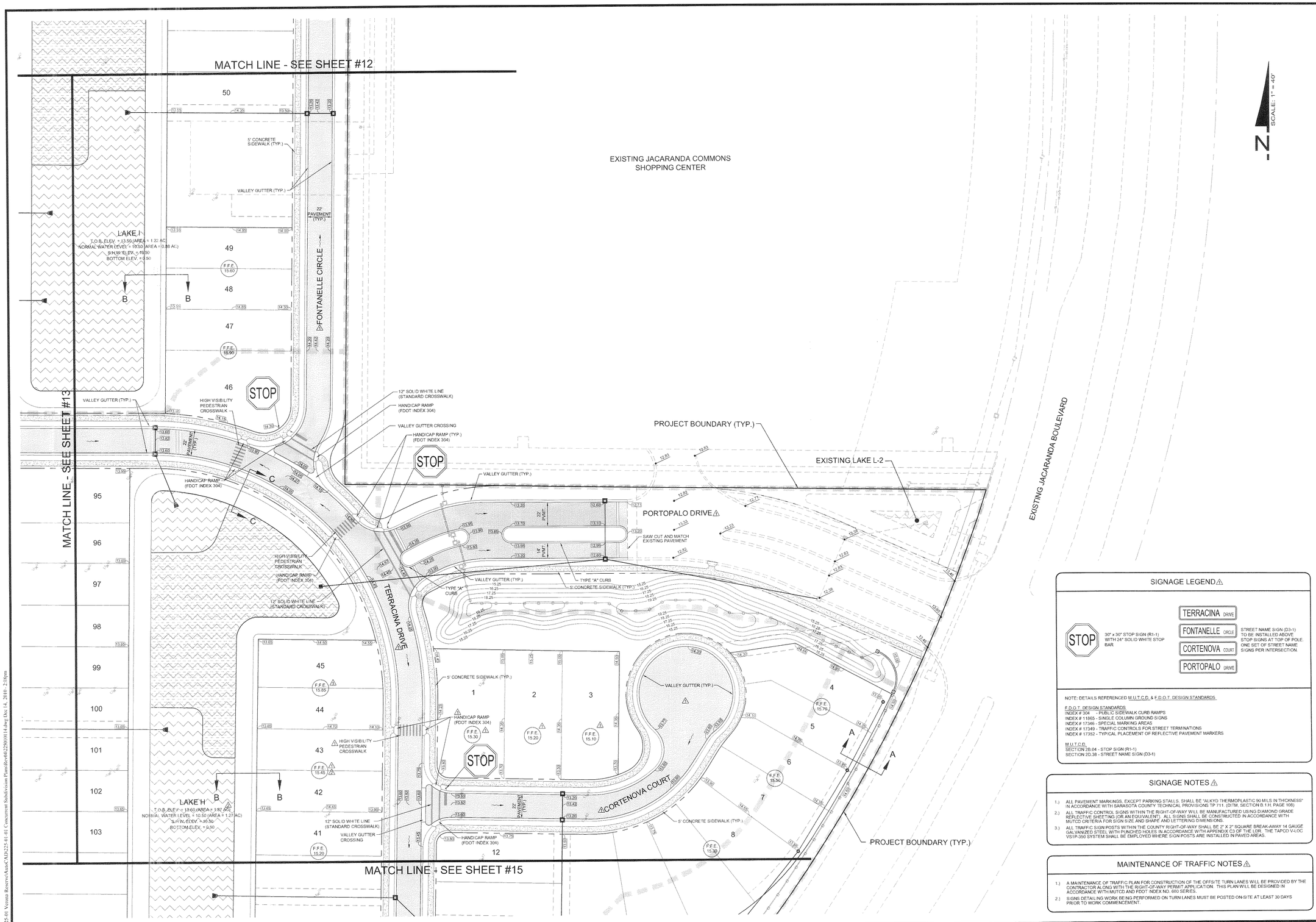

SCALE: 1" = 40'

N

SIGNAGE LEGEND ⚠

STOP — 30" x 30" STOP SIGN (R1-1) WITH 24" SOLID WHITE STOP BAR

TERRACINA DRIVE
FONTANELLE CIRCLE
CORTENOVA COURT
PORTOPALO DRIVE

STREET NAME SIGN (D3-1) TO BE INSTALLED ABOVE STOP SIGNS AT TOP OF POLE. ONE SET OF STREET NAME SIGNS PER INTERSECTION.

NOTE: DETAILS REFERENCED M.U.T.C.D. & F.D.O.T. DESIGN STANDARDS.

F.D.O.T. DESIGN STANDARDS
INDEX # 304 - PUBLIC SIDEWALK CURB RAMPS
INDEX # 11865 - SINGLE COLUMN GROUND SIGNS
INDEX # 17346 - SPECIAL MARKING AREAS
INDEX # 17349 - TRAFFIC CONTROLS FOR STREET TERMINATIONS
INDEX # 17352 - TYPICAL PLACEMENT OF REFLECTIVE PAVEMENT MARKERS

M.U.T.C.D.
SECTION 2B.04 - STOP SIGN (R1-1)
SECTION 2D.38 - STREET NAME SIGN (D3-1)

SIGNAGE NOTES ⚠

1.) ALL PAVEMENT MARKINGS, EXCEPT PARKING STALLS, SHALL BE "ALKYD THERMOPLASTIC 90 MILS IN THICKNESS" IN ACCORDANCE WITH SARASOTA COUNTY TECHNICAL PROVISIONS TP 711, (DTM, SECTION D.1.H. PAGE 108)

2.) ALL TRAFFIC CONTROL SIGNS WITHIN THE RIGHT-OF-WAY WILL BE MANUFACTURED USING DIAMOND GRADE REFLECTIVE SHEETING (OR AN EQUIVALENT). ALL SIGNS SHALL BE CONSTRUCTED IN ACCORDANCE WITH MUTCD CRITERIA FOR SIGN SIZE AND SHAPE AND LETTERING DIMENSIONS.

3.) ALL TRAFFIC SIGN POSTS WITHIN THE COUNTY RIGHT-OF-WAY SHALL BE 2" X 2" SQUARE BREAK-AWAY 14 GAUGE GALVANIZED STEEL WITH PUNCHED HOLES IN ACCORDANCE WITH APPENDIX C3 OF THE LDR. THE TAPCO V-LOC VS1P-350 SYSTEM SHALL BE EMPLOYED WHERE SIGN POSTS ARE INSTALLED IN PAVED AREAS.

MAINTENANCE OF TRAFFIC NOTES ⚠

1.) A MAINTENANCE OF TRAFFIC PLAN FOR CONSTRUCTION OF THE OFFSITE TURN LANES WILL BE PROVIDED BY THE CONTRACTOR ALONG WITH THE RIGHT-OF-WAY PERMIT APPLICATION. THIS PLAN WILL BE DESIGNED IN ACCORDANCE WITH MUTCD AND FDOT INDEX NO. 660 SERIES.

2.) SIGNS DETAILING WORK BEING PERFORMED ON TURN LANES MUST BE POSTED ON-SITE AT LEAST 30 DAYS PRIOR TO WORK COMMENCEMENT.

WALDROP ENGINEERING
CIVIL ENGINEERING & LAND DEVELOPMENT CONSULTANTS
28100 BONITA GRANDE DRIVE, SUITE 305 BONITA SPRINGS, FL 34135
P: 239-405-7777 F: 239-405-7899 EMAIL: info@waldropengineering.com

VERONA RESERVE

CLIENT: TAYLOR MORRISON OF FLORIDA, INC.

PAVING, SIGNAGE & GRADING SITE PLAN (D)

PLAN REVISIONS

1	07/28/10	REVISED PER SARASOTA COUNTY COMMENTS
2	09/14/10	REVISED PER SARASOTA COUNTY COMMENTS
3		
4		
5		
6		

FLORIDA CERTIFICATE OF AUTHORIZATION #8636

NICHOLAS R. SPEACH, P.E.
FL CERTIFICATE NO. 70207
12/15/10

SET NUMBER: 225-01-01

SHEET : 14

J:\225-01 Verona Reserve\AutoCAD\225-01-01 Concurrent Subdivision Plans\Rev04\225001014.dwg Dec 14, 2010 - 2:18pm

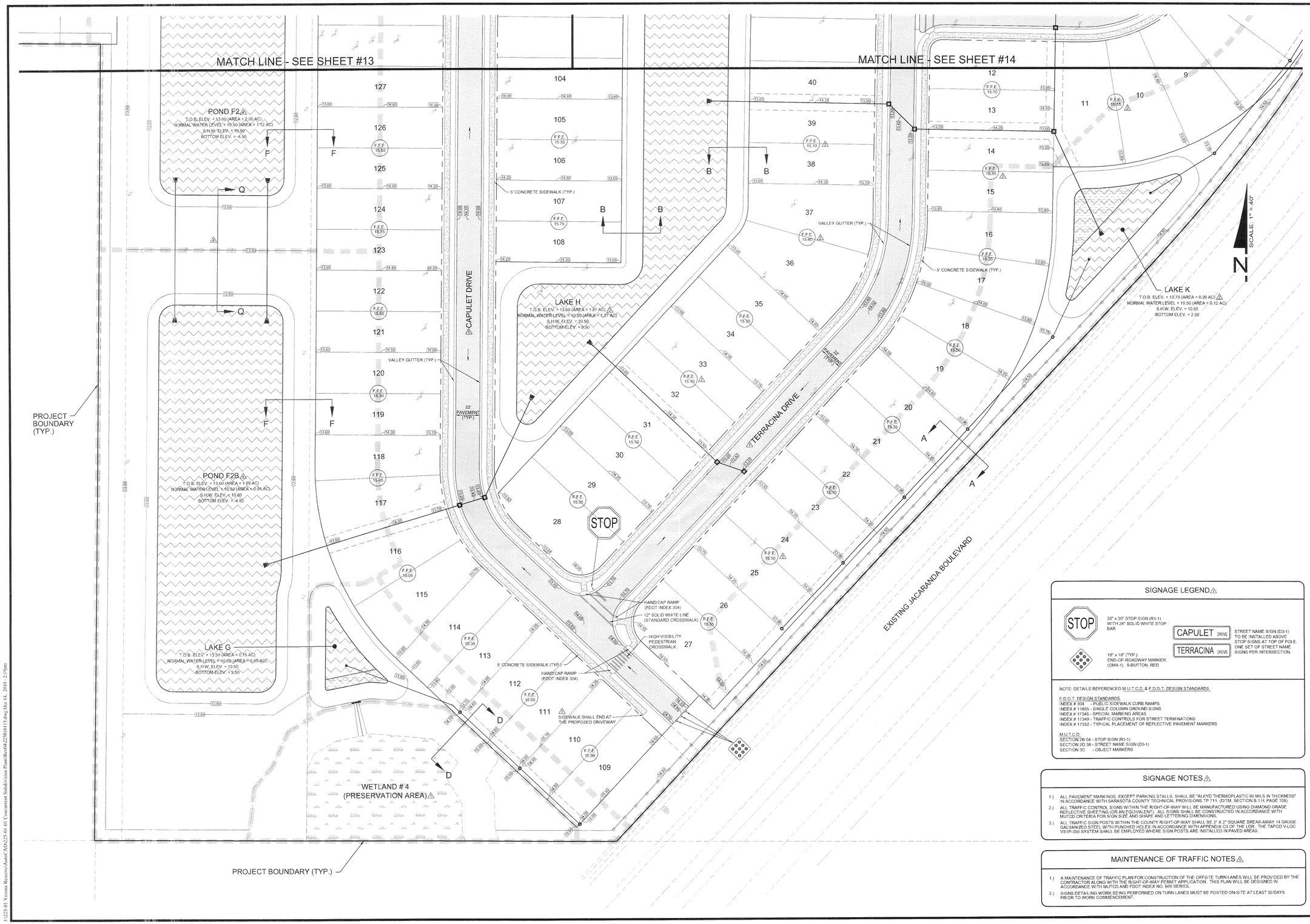

SIGNAGE LEGEND

STOP — 30" x 30" STOP SIGN (R1-1) WITH 24" SOLID WHITE STOP BAR

CAPULET DRIVE / TERRACINA DRIVE — STREET NAME SIGN (D3-1) TO BE INSTALLED ABOVE STOP SIGNS AT TOP OF POLE. ONE SET OF STREET NAME SIGNS PER INTERSECTION.

18" x 18" (TYP.) END-OF-ROADWAY MARKER (OM4-1). 9-BUTTON, RED

NOTE: DETAILS REFERENCED M.U.T.C.D. & F.D.O.T. DESIGN STANDARDS

F.D.O.T. DESIGN STANDARDS
INDEX # 304 - PUBLIC SIDEWALK CURB RAMPS
INDEX # 11865 - SINGLE COLUMN GROUND SIGNS
INDEX # 17346 - SPECIAL MARKING AREAS
INDEX # 17349 - TRAFFIC CONTROLS FOR STREET TERMINATIONS
INDEX # 17352 - TYPICAL PLACEMENT OF REFLECTIVE PAVEMENT MARKERS

M.U.T.C.D.
SECTION 2B.04 - STOP SIGN (R1-1)
SECTION 2D.38 - STREET NAME SIGN (D3-1)
SECTION 3C - OBJECT MARKERS

SIGNAGE NOTES

1.) ALL PAVEMENT MARKINGS, EXCEPT PARKING STALLS, SHALL BE "ALKYD THERMOPLASTIC 90 MILS IN THICKNESS" IN ACCORDANCE WITH SARASOTA COUNTY TECHNICAL PROVISIONS TP 711. (DITM, SECTION B.1.H. PAGE 108)

2.) ALL TRAFFIC CONTROL SIGNS WITHIN THE RIGHT-OF-WAY WILL BE MANUFACTURED USING DIAMOND GRADE REFLECTIVE SHEETING (OR AN EQUIVALENT). ALL SIGNS SHALL BE CONSTRUCTED IN ACCORDANCE WITH MUTCD CRITERIA FOR SIGN SIZE AND SHAPE AND LETTERING DIMENSIONS.

3.) ALL TRAFFIC SIGN POSTS WITHIN THE COUNTY RIGHT-OF-WAY SHALL BE 2" X 2" SQUARE BREAK-AWAY 14 GAUGE GALVANIZED STEEL WITH PUNCHED HOLES IN ACCORDANCE WITH APPENDIX C3 OF THE LDR. THE TAPCO V-LOC VSIP-350 SYSTEM SHALL BE EMPLOYED WHERE SIGN POSTS ARE INSTALLED IN PAVED AREAS.

MAINTENANCE OF TRAFFIC NOTES

1.) A MAINTENANCE OF TRAFFIC PLAN FOR CONSTRUCTION OF THE OFFSITE TURN LANES WILL BE PROVIDED BY THE CONTRACTOR ALONG WITH THE RIGHT-OF-WAY PERMIT APPLICATION. THIS PLAN WILL BE DESIGNED IN ACCORDANCE WITH MUTCD AND FDOT INDEX NO. 600 SERIES.

2.) SIGNS DETAILING WORK BEING PERFORMED ON TURN LANES MUST BE POSTED ON-SITE AT LEAST 30 DAYS PRIOR TO WORK COMMENCEMENT.

WALDROP ENGINEERING
CIVIL ENGINEERING & LAND DEVELOPMENT CONSULTANTS
28100 BONITA GRANDE DRIVE - SUITE 305 BONITA SPRINGS, FL 34135
P: 239-405-7777 F: 239-405-7899 EMAIL: info@waldropengineering.com

VERONA RESERVE

CLIENT: TAYLOR MORRISON OF FLORIDA, INC.

PAVING, SIGNAGE & GRADING SITE PLAN (E)

PLAN REVISIONS

1	07/28/10	REVISED PER SARASOTA COUNTY COMMENTS
2	09/14/10	REVISED PER SARASOTA COUNTY COMMENTS
3	12/14/10	REVISED PER CLIENT COMMENTS

FLORIDA CERTIFICATE OF AUTHORIZATION #6636

NICHOLAS B. SPEACH, P.E. 12/15/10
FL CERTIFICATE NO. 70207

SET NUMBER: 225-01-01

SHEET: 15

I:\225-01 Verona Reserve\AutoCAD\225-01-01 Concurrent Subdivision Plan\Rec\04230101\15.dwg Dec 14, 2010 - 2:10pm

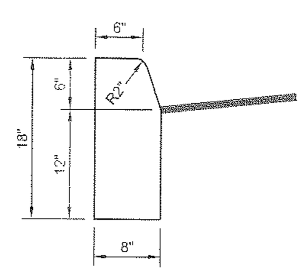

TYPE "D"

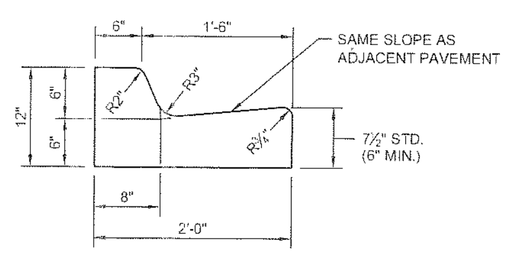

TYPE "F"

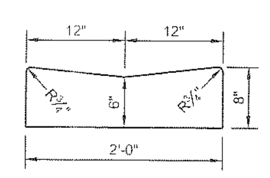

VALLEY GUTTER

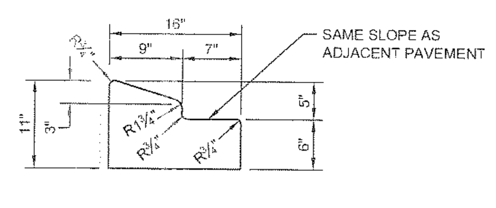

TYPE "A"

CONCRETE CURB NOTES:

1.) CONCRETE SHALL HAVE A COMPRESSIVE STRENGTH OF 3,000 P.S.I. IN 28 DAYS UNLESS OTHERWISE NOTED.
2.) CURB SHALL BE CONSTRUCTED IN CONFORMANCE WITH FDOT INDEX 300
3.) CURB SHALL HAVE EXPANSION JOINTS INSTALLED AT ALL INLETS AND EVERY ±500'.

CURB AND CURB AND GUTTER DETAILS

N.T.S.

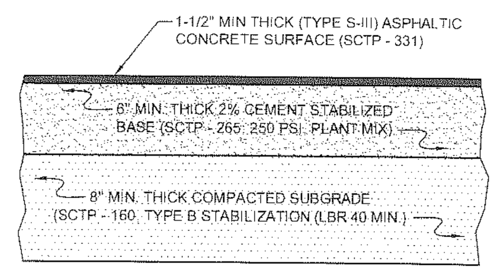

NOTE:

CEMENT BASE MAY BE SUBSTITUTED WITH 7" SHELL BASE AT 98% DENSITY (LBR-100).

TYPICAL PAVING SECTION

N.T.S.

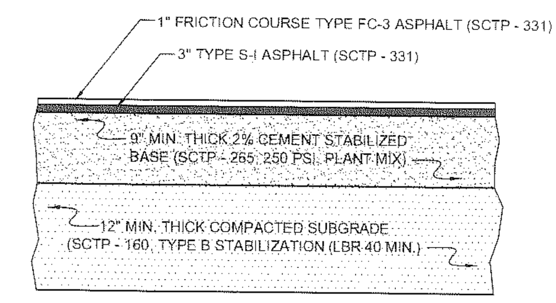

NOTE:

CEMENT BASE MAY BE SUBSTITUTED WITH 11" SHELL BASE AT 98% DENSITY (LBR-100).

TYPICAL PAVING SECTION

(VENICE AVENUE IMPROVEMENTS)

N.T.S.

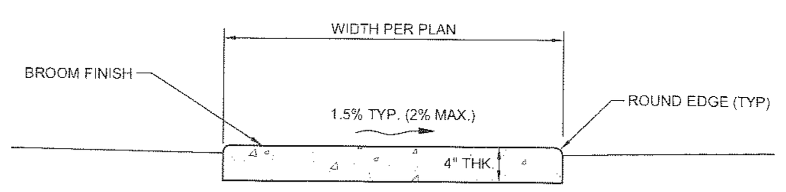

NOTES:

1.) SIDEWALK SHALL BE CONSTRUCTED IN CONFORMANCE WITH FDOT STANDARD INDEX 310 AND STANDARD SPECIFICATION 522 AND CORRESPONDING STANDARDS.
2.) COMPACT FILL AREAS TO MINIMUM 95 % OF AASHTO T99 DENSITY.
3.) SIDEWALK SHALL HAVE CONTRACTION JOINTS SPACED EQUALLY TO THE SIDEWALK WIDTH AND HAVE EXPANSION JOINTS EVERY 120' MAXIMUM.
4.) CONCRETE SHALL HAVE A COMPRESSIVE STRENGTH OF 3000 PSI IN 28 DAYS.
5.) SIDEWALKS SHALL HAVE A MAXIMUM RUNNING SLOPE OF 1:20 (5%) AND A MAXIMUM CROSS SLOPE OF 1:50 (2%) PER ADA STANDARDS FOR ACCESSIBLE DESIGN SECTION 4.3.
6.) CURB RAMPS SHALL BE CONSTRUCTED IN CONFORMANCE WITH ADA STANDARDS FOR ACCESSIBLE DESIGN SECTION 4.7 AND FDOT STANDARD INDEX 304.

TYPICAL CONCRETE SIDEWALK DETAIL

N.T.S.

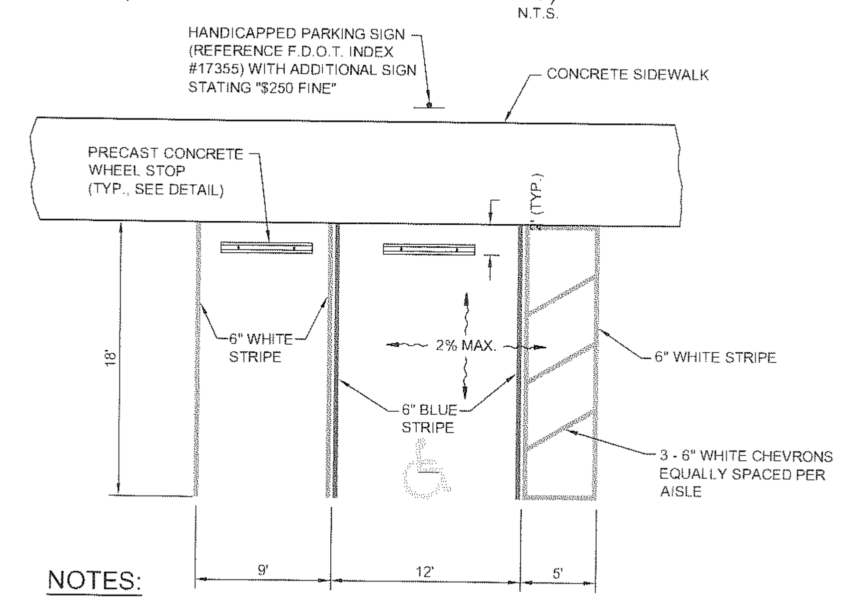

NOTES:

1.) ACCESSIBLE PARKING SPACES AND ACCESS AISLES SHALL BE LEVEL WITH SURFACE SLOPES NOT EXCEEDING 1:50 (2%) IN ALL DIRECTIONS PER ADA STANDARDS FOR ACCESSIBLE DESIGN SECTION 4.6.

TYPICAL PARKING SPACE DETAIL

N.T.S.

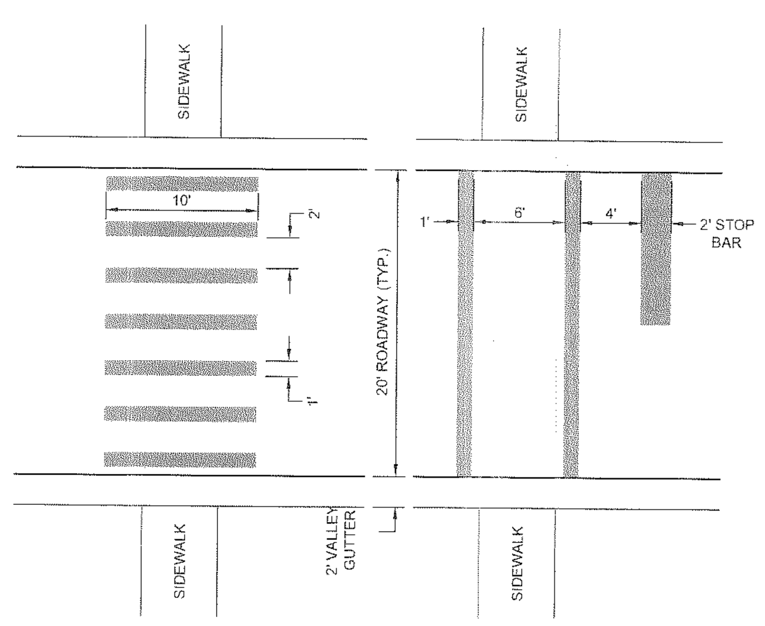

HIGH VISIBILITY

STANDARD
W/ STOP BAR

NOTES:

1.) SEE PLANS FOR TYPE OF CROSSWALK STRIPING AND LOCATION.
2.) DETAILS REFERENCED F.D.O.T. INDEX NO. 17346 & M.U.T.C.D. SECTION 3B.17
3.) CROSSWALKS SHALL HAVE A MAXIMUM RUNNING SLOPE OF 1:20 (5%) AND A MAXIMUM CROSS SLOPE OF 1:50 (2%) PER ADA STANDARDS FOR ACCESSIBLE DESIGN SECTION 4.3.

TYPICAL PEDESTRIAN CROSSWALKS

N.T.S.

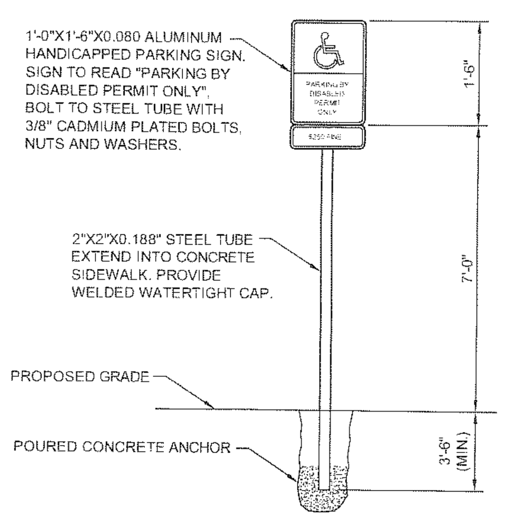

HANDICAPPED PARKING SIGN

(FDOT INDEX #17355) N.T.S.

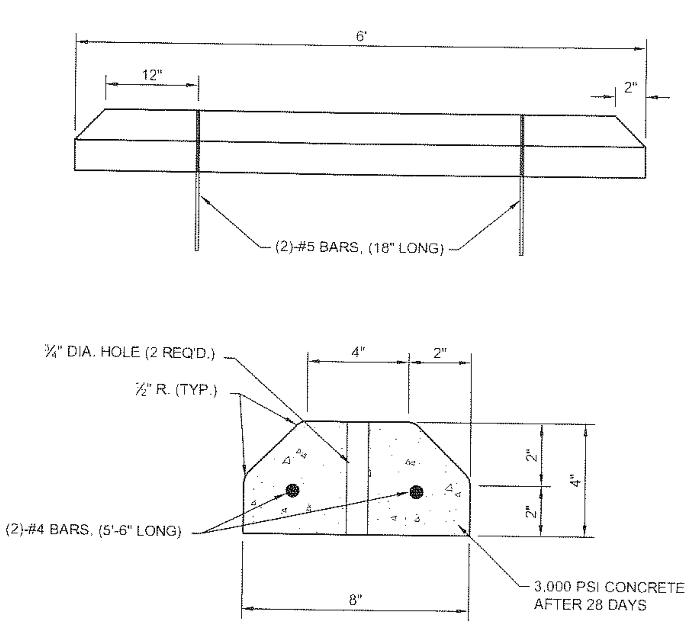

TYPICAL PRECAST CONCRETE WHEEL STOP

N.T.S.

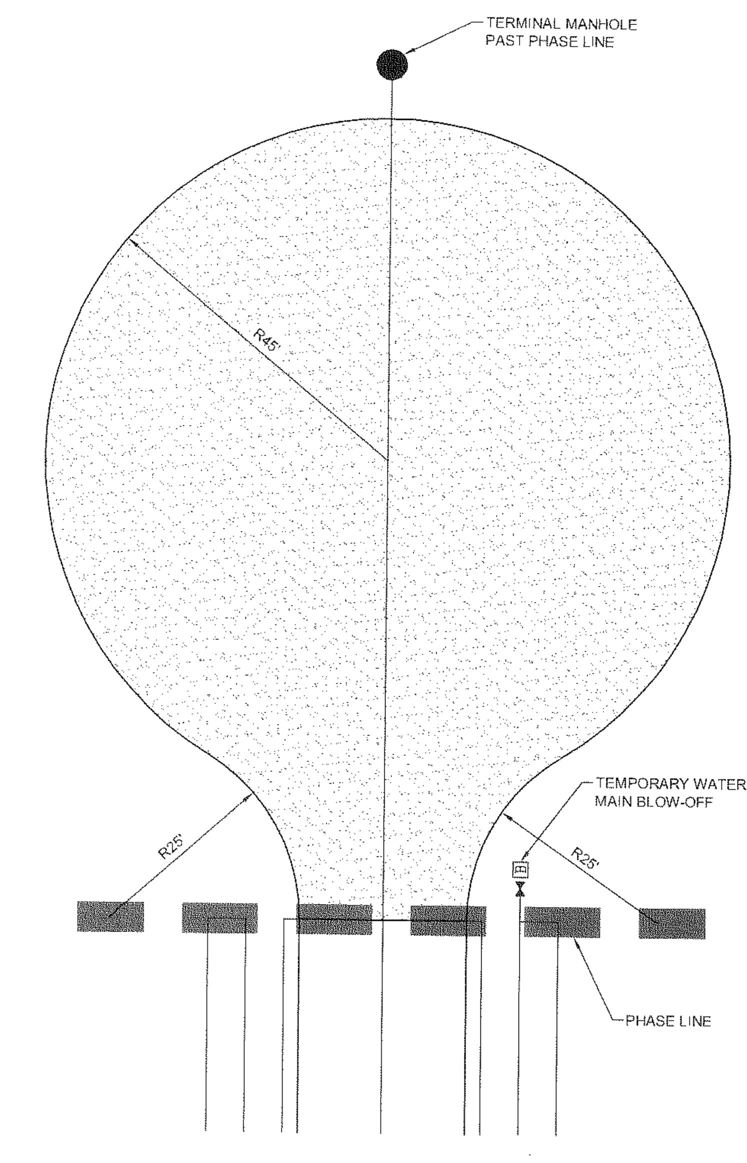

TEMPORARY TURN-AROUND ⚠

N.T.S.

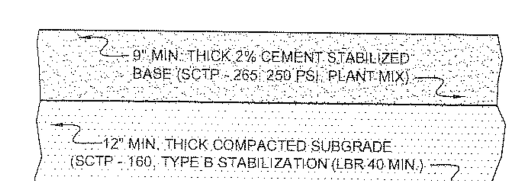

TURN-AROUND SECTION

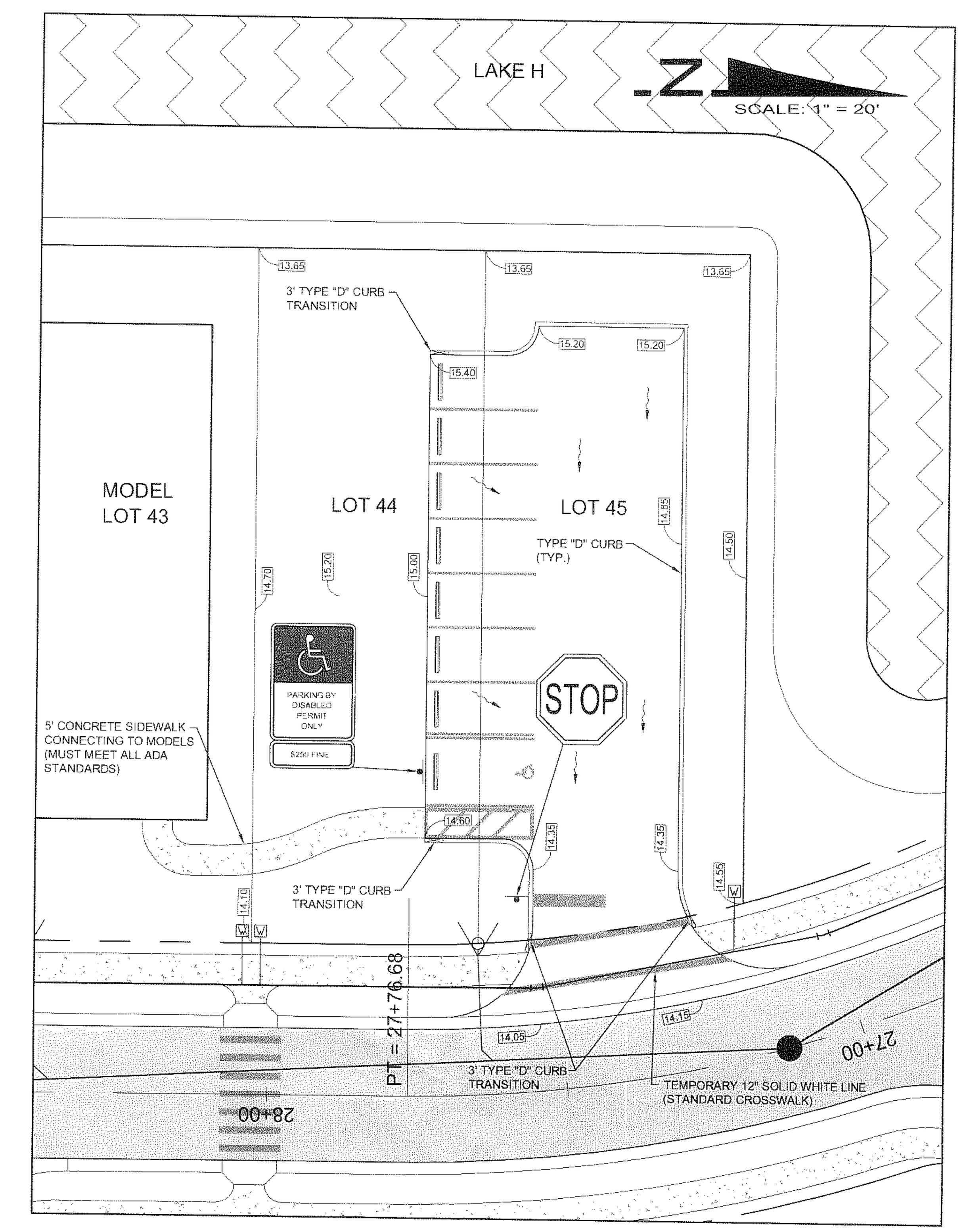

TEMPORARY MODEL PARKING LOT DETAIL ⚠⚠

SCALE: 1" = 20'

NOTE:

TEMPORARY SIGNAGE WILL BE REMOVED & PARKING LOT WILL BE DEMOLISHED WHEN MODELS ARE NO LONGER IN USE.

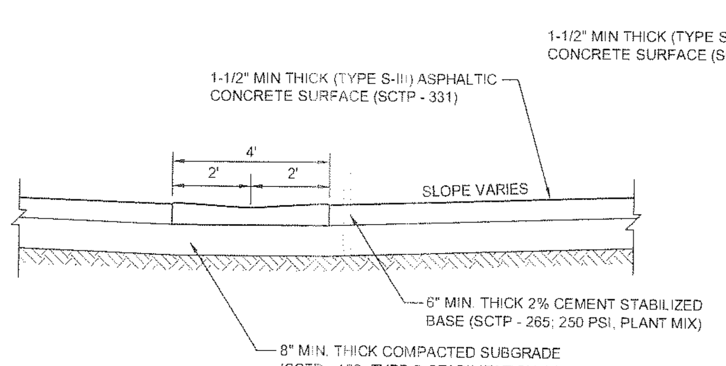

SECTION A-A ⚠

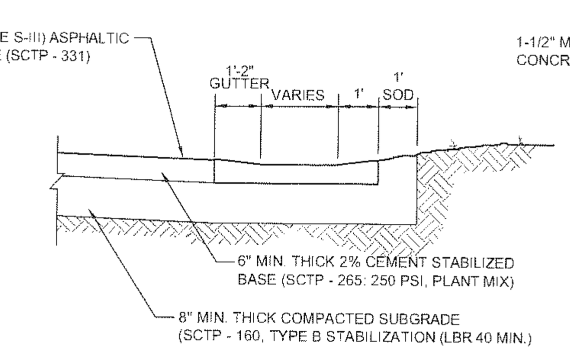

SECTION B-B ⚠

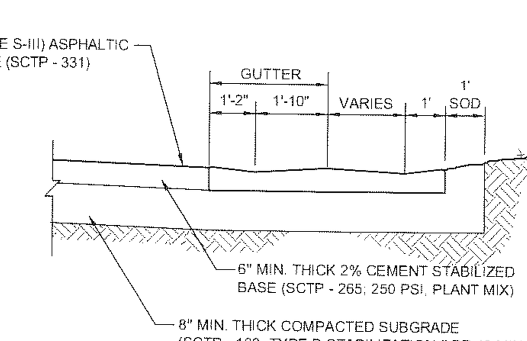

SECTION C-C ⚠

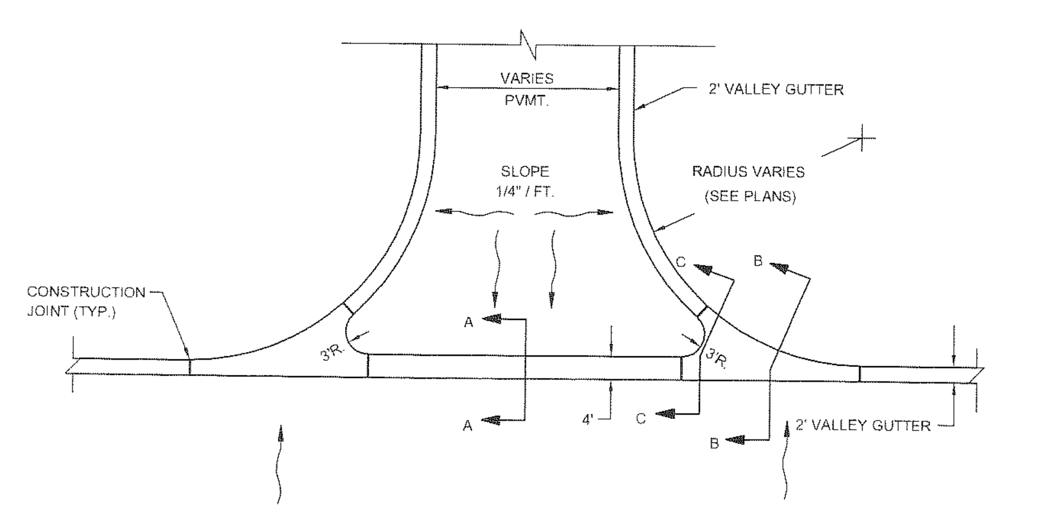

TYPICAL 4' VALLEY CROSSING DETAIL (2' VALLEY GUTTER)

N.T.S.

CONCRETE CURB JOINTS

1.) CONCRETE SHALL HAVE A COMPRESSIVE STRENGTH OF 3000 PSI IN 28 DAYS, UNLESS OTHERWISE NOTED.
2.) AN EXPANSION JOINT WILL BE PLACED AT THE END OF ALL RETURNS AT INTERVALS NOT TO EXCEED 50' WITH CONTRACTION JOINTS AT 10' INTERVALS BETWEEN.
3.) PVC SLIP JOINTS SHALL BE CONSTRUCTED TO PERMIT EXPANSION & CONTRACTION OF STEEL ACROSS JOINT.
4.) EXPANSION JOINTS SHALL BE CONSTRUCTED WITH 1/2" BITUMINOUS IMPREGNATED EXPANSION JOINT MATERIAL.

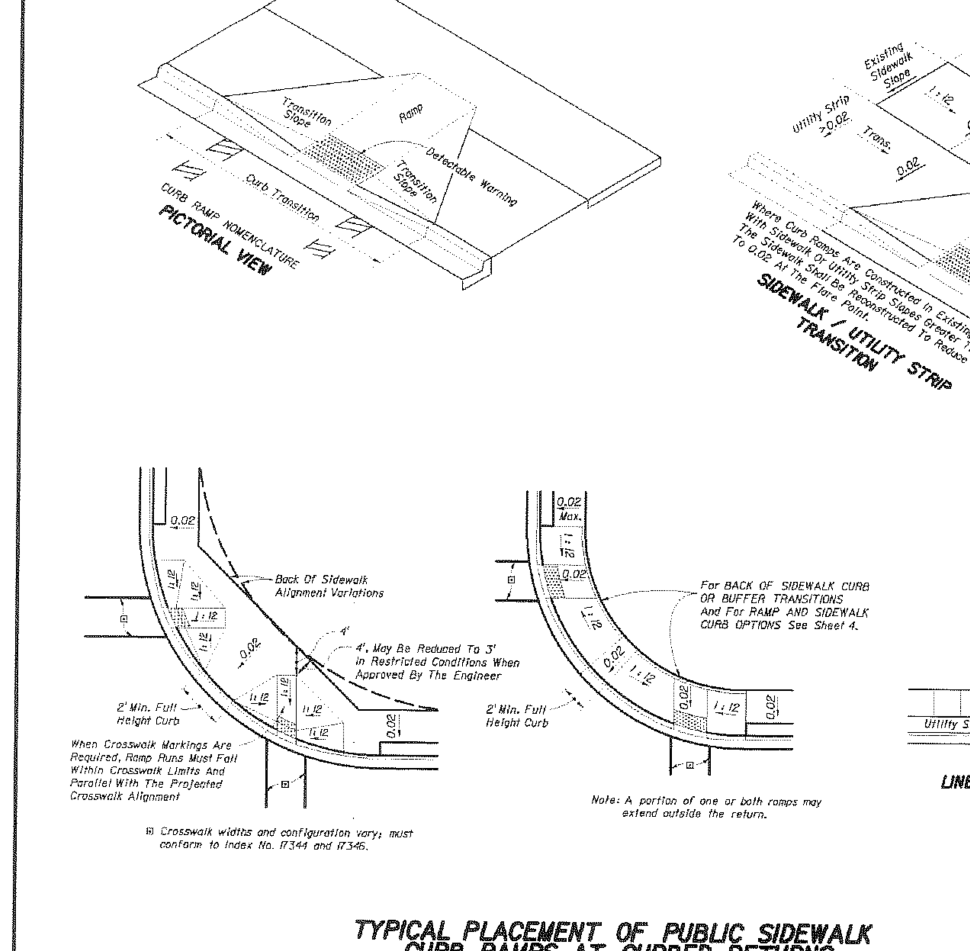

TYPICAL PLACEMENT OF PUBLIC SIDEWALK CURB RAMPS AT CURBED RETURNS

GENERAL NOTES

1. Public sidewalk curb ramps shall be constructed in the public right of way at locations that will provide continuous unobstructed pedestrian circulation paths to pedestrian areas, elements and facilities in the public right of way and to accessible pedestrian routes on adjacent sites. Curbed facilities with sidewalks and those without sidewalks are to have curb ramps constructed at all street intersections and at turnouts that have curbed returns. Partial curb returns shall extend to the limit prescribed by Index No. 515 to accommodate curb ramps. Ramps constructed at locations without sidewalks shall have a landing constructed at the top of each ramp, see Sheet 5.

2. The location and orientation of curb ramps shall be as shown in the plans.

3. Curb ramp running slopes at unrestrained sites shall not be steeper than 1 : 12 and cross slope shall be 0.02 or flatter. Transition slopes shall not be steeper than 1 : 12.

When altering existing pedestrian facilities where existing site development precludes the accommodation of a ramp slope of 1 : 12, a running slope between 1 : 12 and 1 : 10 is permitted for a rise of 6" maximum and a running slope of between 1 : 10 and 1 : 8 is permitted for a rise of 3" maximum. Where compliance with the requirements for cross slope cannot be fully met, the minimum feasible cross slope shall be provided.

Ramp running slope is not required to exceed 8' in length, except at sites where the plans specify a greater length.

4. If a curb ramp is located where pedestrians must walk across the ramp, then the walk shall have transition slopes to the ramp; the maximum slope of the transitions shall be 1 : 12. Ramps with curb returns may be used at locations where other improvements provide guidance away from that portion of curb perpendicular to the sidewalk; improvements for guidance are not required at curb ramps for linear pedestrian traffic.

5. Curb ramp detectable warning surfaces shall extend the full width of the ramp and in the direction of travel 24" from the back of curb. Detectable warning surfaces shall be constructed in accordance with Specification 527. See Sheet 6 of 6 for detectable warning layouts. Transition slopes are not to have detectable warnings.

6. Where a curb ramp is constructed within existing curb, curb and gutter and/or sidewalk, the existing curb or curb and gutter shall be removed to the nearest joint beyond the curb transitions or to the extent that no remaining section of curb or curb and gutter is less than 5' long. The existing sidewalk shall be removed to the nearest joint beyond the transition slope or walk around or to the extent that no remaining section of sidewalk is less than 5' long. For details of Concrete Sidewalk See Index 310.

7. Alpha-numeric identifications are for reference (plans, permits, etc.).

8. Public sidewalk curb ramps are to be paid for as follows:
Ramps, reconstructed sidewalks, walk around sidewalks, sidewalk landings and sidewalk curbs are to be paid for under the contract unit price for Sidewalk Concrete, (__" Thick), SY. Curb transitions and reconstructed curbs are to be paid for under the contract unit price for the parent curb, i.e., Curb Conc., (Type __), LF or Curb and Gutter Conc., (Type __), LF.

When a separate pay item for the removal and disposal of existing curb, curb and gutter, and/or sidewalk is not provided in the plans, the cost of removal and disposal of these features shall be included in the contract unit price for new curb, curb and gutter and/or sidewalk respectively.

9. Acceptance Criteria for Detectable Warnings:
(a) The ramp detectable warning surface shall be complete and uniform in color and texture
(b) 90% of the individual truncated domes must comply with the design criteria
(c) There may be no more than 4 non-complying domes in any one square foot of surface
(d) No two adjacent domes may be non-compliant
(e) Surface may not deviate more than 0.10" from a true plane

10. All sidewalk surfaces, ramp surfaces, and landings with a cross slope shown in this Index to be 0.02 shall be 0.02 maximum. All ramp surfaces and ramp transition slopes with a slope shown in this Index to be 1:12 shall be 1:12 maximum.

2006 FDOT Design Standards	Last Revision	Sheet No.
PUBLIC SIDEWALK CURB RAMPS	07/01/05	1 of 6
	Index No.	304

WALDROP ENGINEERING
CIVIL ENGINEERING & LAND DEVELOPMENT CONSULTANTS
28100 BONITA GRANDE DRIVE - SUITE 305 BONITA SPRINGS, FL 34135
P: 239-405-7777 F: 239-405-7899 EMAIL: info@waldropengineering.com

VERONA RESERVE

CLIENT: TAYLOR MORRISON OF FLORIDA, INC.

PAVING DETAILS AND
TEMPORARY MODEL PARKING LOT DETAIL

PLAN REVISIONS

	Date	Description
⚠	07/28/10	REVISED PER SARASOTA COUNTY COMMENTS
⚠	09/14/10	REVISED PER SARASOTA COUNTY COMMENTS

FLORIDA CERTIFICATE OF AUTHORIZATION #8636

NICHOLAS B. SPEACH, P.E. 12/15/10
FL CERTIFICATE NO. 70207

SET NUMBER: 225-01-01

SHEET: 16

J:\225-01 Verona Reserve\AutoCAD\225-01-01 Concurrent Subdivision Plans\Rev04\2250101116.dwg Dec 14, 2010 - 2:19pm

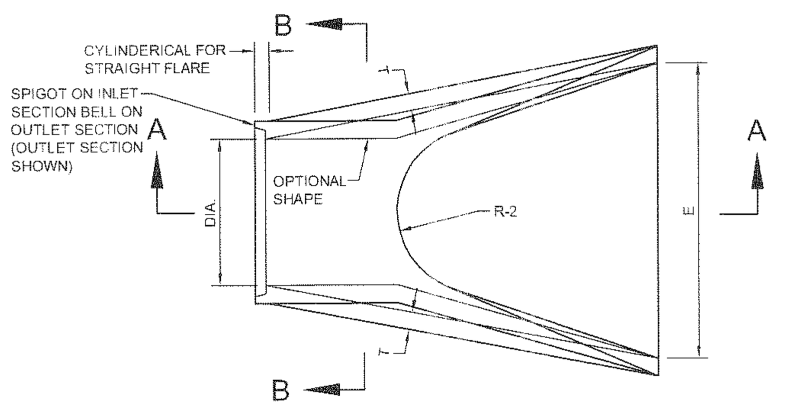

PLAN

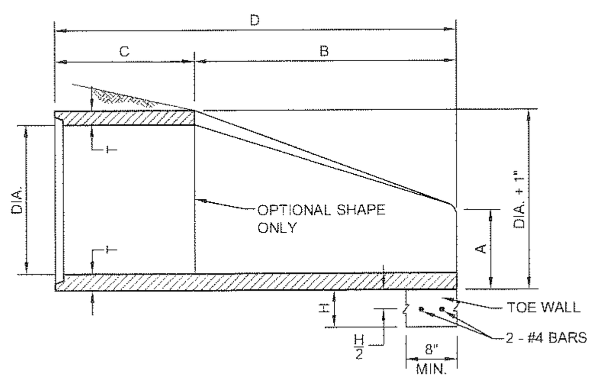

SECTION A-A

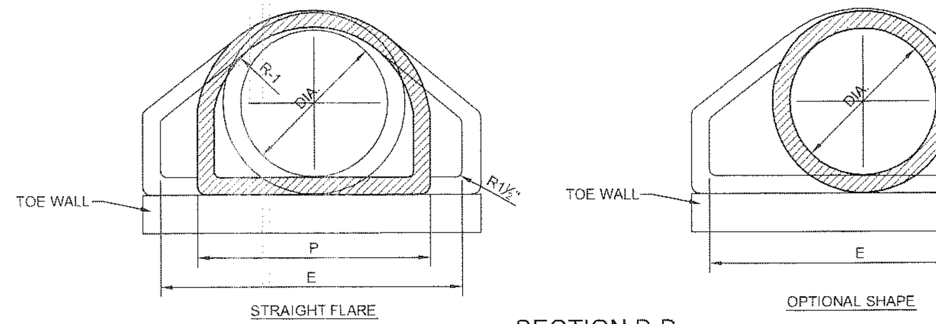

SECTION B-B

FLARED END SECTION

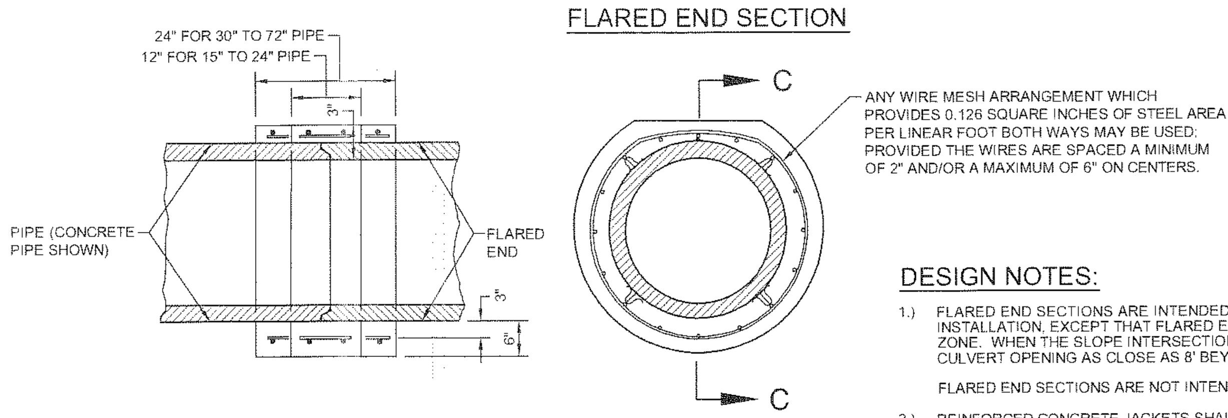

SECTION C-C

END VIEW

REINFORCED CONCRETE JACKET DETAIL

DIMENSIONS TABLE															
DIA.	T	REINF. SQ IN/LF	BELL OR SPIGOT	A	B	C	D	E	P	R-1	R-2	FLAT	WEIGHT (LBS.)	H	TOE WALL CLASS ~ CONC (MISC.) CY
12"	2"	0.070	1½"	4"	2'-0"	4'-⅞"	6'-⅞"	2'-0"	19-15/16"	10⅞"	9"	3½"	530	12"	0.06
15"	2¼"	0.070	2"	6"	2'-3"	3'-10"	6'-1"	2'-6"	24-5/16"	12½"	11"	3½"	740	12"	0.07
18"	2½"	0.070	2½"	9"	2'-3"	3'-10"	6'-1"	3'-0"	29"	15½"	12"	4"	990	15"	0.11
21"	2¾"	0.070	2¼"	9"	2'-11"	3'-2"	6'-1"	3'-6"	31⅝"	16⅞"	13"	4"	1280	15"	0.12
24"	3"	0.070	2½"	9½"	3'-7½"	2'-6"	6'-1½"	4'-0"	33-9/16"	16-13/16"	14"	4½"	1520	18"	0.17
27"	3¼"	0.148	2½"	10½"	4'-0"	2'-1½"	6'-1½"	4'-6"	36"	18-9/16"	14½"	4½"	1930	18"	0.19
30"	3½"	0.148	3"	1'-0"	4'-6"	1'-7¾"	6'-1¾"	5'-0"	37"	18½"	15"	5"	2190	21"	0.24
36"	4"	0.148	3½"	1'-3"	5'-3"	2'-10¾"	8'-1¾"	6'-0"	47-13/16"	24-5/16"	20"	5½"	4100	21"	0.29
42"	4½"	0.148	3¾"	1'-9"	5'-3"	2'-11"	8'-2"	6'-6"	53⅞"	27½"	22"	5½"	5380	24"	0.36
48"	5"	0.148	4¼"	2'-0"	6'-0"	2'-2"	8'-2"	7'-0"	56½"	28½"	22"	5¾"	6550	24"	0.39
54"	5½"	0.174	4¾"	2'-3"	5'-5"	2'-11"	8'-4"	7'-6"	65½"	33⅛"	24"	6¼"	8040	24"	0.42
60"	6"	0.174	5"	2'-6"	5'-0"	3'-3"	8'-3"	8'-0"	72½"	36-7/16"	24"	6¾"	8750	24"	0.44
66"	6½"	0.174	5½"	2'-0"	6'-6"	1'-9"	8'-3"	8'-6"	72"	36⅛"	24"	7¼"	10630	24"	0.47
72"	7"	0.174	6"	2'-0"	6'-6"	1'-9"	8'-3"	9'-0"	77-13/16"	38-15/16"	24"	7¾"	12520	24"	0.50

GENERAL NOTES:

1.) FLARED END SECTIONS SHALL CONFORM TO THE REQUIREMENTS OF ASTM C-76 WITH THE EXCEPTION THAT DIMENSIONS AND REINFORCEMENT SHALL BE AS PRESCRIBED IN THE TABLE ABOVE. CIRCUMFERENTIAL REINFORCEMENT MAY CONSIST OF EITHER ONE CAGE OR TWO CAGES OF STEEL. COMPRESSIVE STRENGTH OF CONCRETE SHALL BE 4000 PSI. SHOP DRAWINGS FOR FLARED END SECTIONS HAVING DIMENSIONS OTHER THAN ABOVE MUST BE SUBMITTED FOR APPROVAL TO THE STATE DRAINAGE ENGINEER.

2.) CONNECTIONS BETWEEN THE FLARED END SECTION AND THE PIPE CULVERT MAY BE ANY OF THE FOLLOWING TYPES UNLESS OTHERWISE SHOWN ON THE PLANS.

a.) JOINTS MEETING THE REQUIREMENTS OF SECTION 941-1.5 OF THE STANDARD SPECIFICATIONS (O-RING GASKET). FLARED END SECTION JOINT DIMINSIONS AND TOLERANCES SHALL BE IDENTICAL OR COMPATIABLE TO THOSE USED IN THE PIPE CULVERT JOINT. WHEN PIPE CULVERT AND FLARED END SECTION MANUFACTURERS ARE DIFFERENT, THE COMPATIABILITY OF JOINT DESIGNS SHALL BE CERTIFIED TO BY THE MANUFACTURER OF THE FLARED END SECTIONS.

b.) JOINTS SEALED WITH PREFORMED PLASTIC GASKETS. THE GASKETS SHALL MEET THE REQUIREMENTS OF SECTION 942-2 OF THE STANDARD SPECIFICATIONS AND THE MINIMUM SIZES FOR GASKETS SHALL BE AS THAT SPECIFIED FOR EQUIVALENT SIZES OF ELLIPTICAL PIPE.

c.) REINFORCED CONCRETE JACKETS, AS DETAILED ON THIS DRAWING. COST OF THE REINFORCED CONCRETE JACKET TO BE INCLUDED IN THE CONTRACT UNIT PRICE FOR THE FLARED END SECTION. WHEN NON-COATED CORRUGATED METAL PIPE IS CALLED FOR IN THE PLANS, THE PIPE SHALL BE BITUMINOUS COATED IN THE JACKETED AREA AS SPECIFIED ON INDEX NO. 280. BITUMINOUS COATING TO BE INCLUDED IN THE CONTRACT UNIT PRICE FOR THE PIPE CULVERT.

3.) TOE WALLS SHALL BE CONSTRUCTED WHEN SHOWN ON THE PLANS OR AT LOCATIONS DESIGNATED BY THE ENGINEER. TOE WALLS ARE TO BE CAST-IN-PLACE WITH CLASS ~ CONCRETE AND PAID FOR UNDER THE CONTRACT UNIT PRICE FOR CLASS ~ CONCRETE (MISCELLANEOUS) CY. REINFORCING STEEL TO BE INCLUDED IN COST OF TOE WALL.

4.) ON SKEWED PIPE CULVERTS THE FLARED END SECTIONS SHALL BE PLACED IN LINE WITH THE PIPE CULVERT. SIDE SLOPES SHALL BE WARPED AS REQUIRED TO FIT THE FLARED END SECTIONS.

5.) FLARED END SECTION TO BE PAID FOR UNDER THE CONTRACT UNIT PRICE FOR FLARED END SECTION (CONCRETE), EACH. SODDING SHALL BE IN ACCORDANCE WITH INDEX NO. 281, AND PAID FOR UNDER THE CONTRACT UNIT PRICE FOR SODDING, SY.

DESIGN NOTES:

1.) FLARED END SECTIONS ARE INTENDED FOR USE OUTSIDE THE CLEAR ZONE ON MEDIAN DRAIN AND CROSS DRAIN INSTALLATION, EXCEPT THAT FLARED END SECTIONS FOR PIPE SIZES 12" AND 15" ARE PERMITTED WITHIN THE CLEAR ZONE. WHEN THE SLOPE INTERSECTION PERMITS, THESE FLARED END SECTIONS MAY BE LOCATED WITH THE CULVERT OPENING AS CLOSE AS 8' BEYOND THE OUTSIDE EDGE OF THE SHOULDER.

FLARED END SECTIONS ARE NOT INTENDED FOR SIDE DRAIN INSTALLATIONS.

2.) REINFORCED CONCRETE JACKETS SHALL BE USED AT ALL LOCATIONS WHERE HIGH VELOCITIES AND/OR HIGHLY EROSIVE SOILS MAY CAUSE DISJOINTING. THESE LOCATIONS ARE TO BE SHOWN ON THE PLANS.

3.) TOE WALLS SHALL BE USED WHENEVER THE ANTICIPATED VELOCITY OF DISCHARGE AND SOIL TYPE ARE SUCH THAT EROSIVE ACTION WOULD OCCUR. TOE WALLS ARE NOT REQUIRED WHERE DITCH PAVEMENT IS PROVIDED, EXCEPT WHEN DISJOINTING WOULD OCCUR IF THE DITCH PAVEMENT SHOULD FAIL.

FLARED END DETAILS
N.T.S.

MINIMUM DIMENSIONS FOR DRAINAGE STRUCTURES	
PIPE SIZE	MINIMUM STRUCTURE WIDTH
15"	3.0 FT
18"	3.0 FT
24"	3.5 FT
30"	4.0 FT
36"	4.5 FT
42"	5.0 FT
48"	5.5 FT
54"	6.0 FT

DRAINAGE STRUCTURE TABLE	
TYPE OF STRUCTURE	REFERENCE
GRATE INLET	SEE DETAIL
VALLEY GUTTER INLET	SEE DETAIL
JUNCTION BOX	FDOT INDEX 200, 201
TYPE "9" CURB INLET	FDOT INDEX 200, 214

GENERAL STRUCTURE DESIGN NOTES:

1.) ALL REINFORCING STEEL SHALL HAVE A MINIMUM TWO INCHES OF COVER.

2.) ALL CONCRETE SHALL HAVE COMPRESSIVE STRENGTH OF 3,000 PSI @ 28 DAYS.

GENERAL NOTE

1.) ALL STRUCTURES REQUIRE FIELD POURED CONCRETE INVERT TO ELIMINATE STANDING WATER.

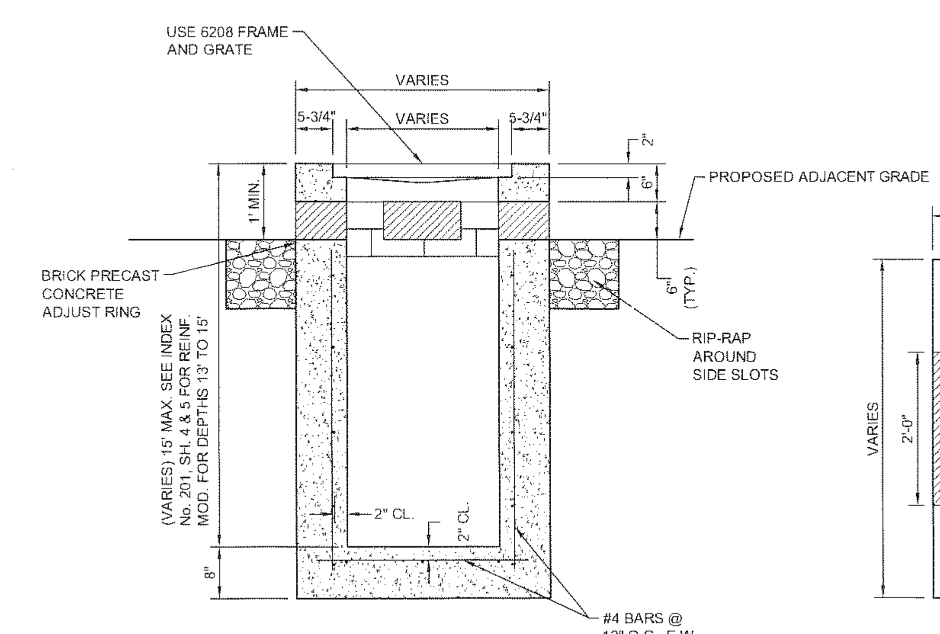

SECTION

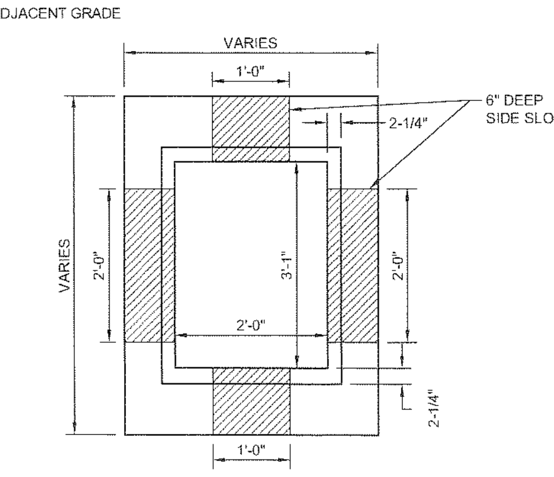

PLAN

MODIFIED GRATE INLET WITH SIDE SLOTS
N.T.S.

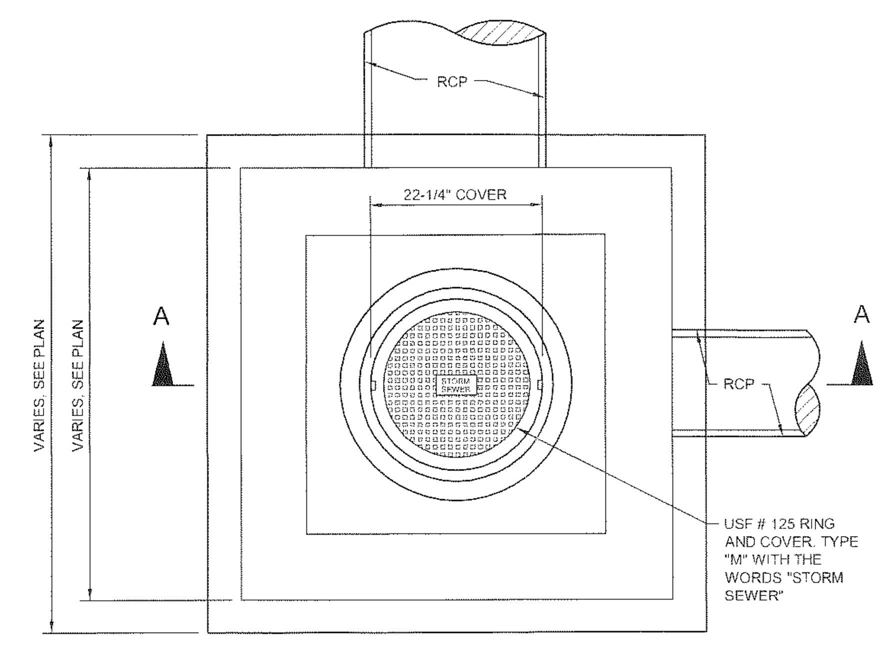

PLAN

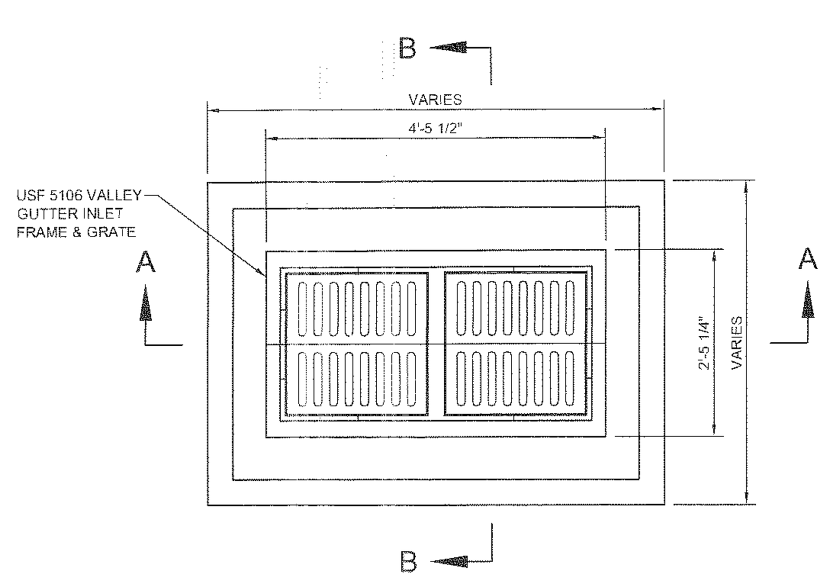

PLAN

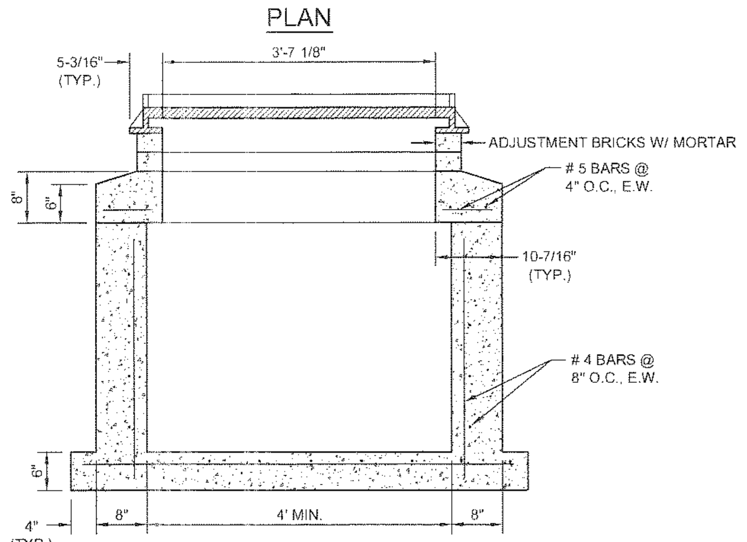

SECTION A-A

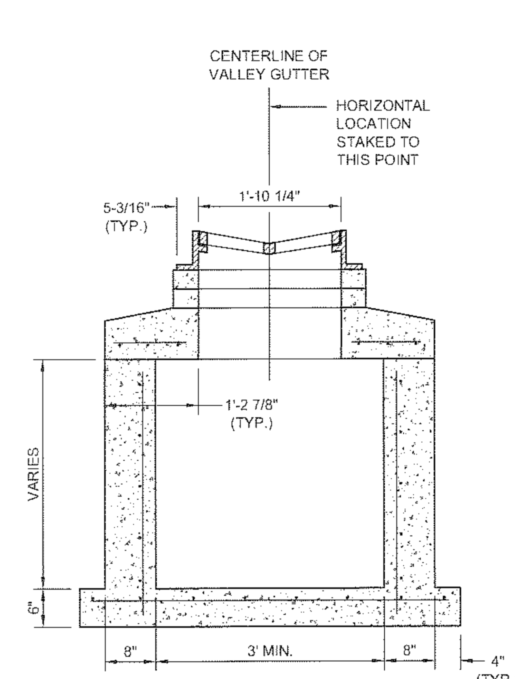

SECTION B-B

TYPICAL VALLEY GUTTER INLET DETAIL
N.T.S.

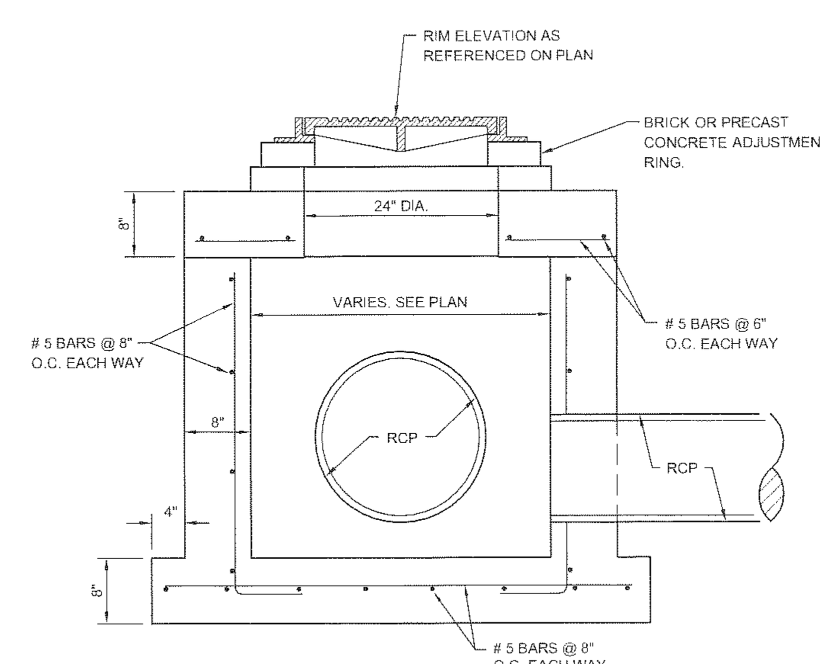

SECTION A-A

JUNCTION BOX DETAIL
N.T.S.

DESIGN NOTES:

1. ALL REINFORCING STEEL SHALL HAVE A MINIMUM TWO INCHES OF COVER.

2. ALL CONCRETE SHALL HAVE COMPRESSIVE STRENGTH OF 3,000 PSI @ 28 DAYS.

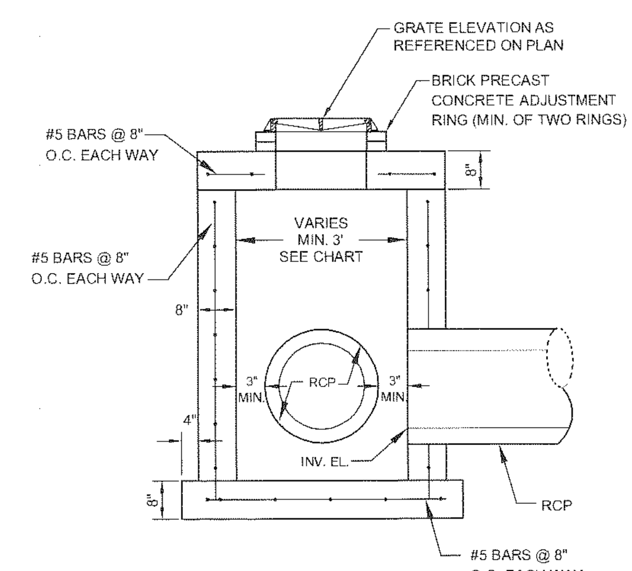

SECTION A-A

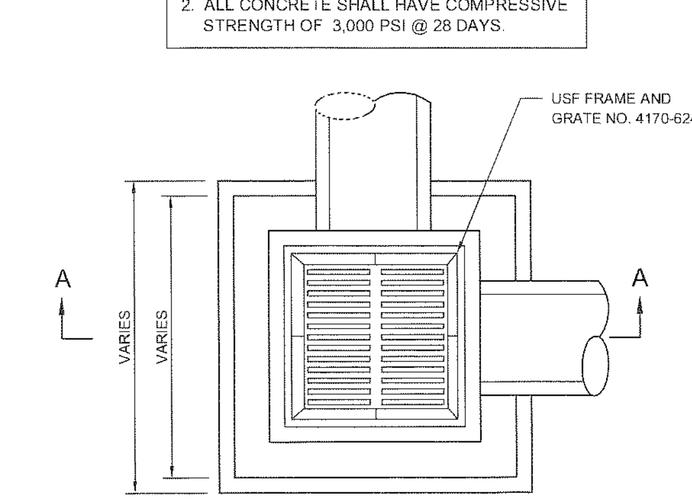

PLAN

TYPE "C" GRATE INLET DETAIL
(REF. FDOT No. 232) N.T.S.

WALDROP ENGINEERING
CIVIL ENGINEERING & LAND DEVELOPMENT CONSULTANTS
28100 BONITA GRANDE DRIVE - SUITE 305 BONITA SPRINGS, FL 34135
P: 239-405-7777 F: 239-405-7899 EMAIL: info@waldropengineering.com

VERONA RESERVE

CLIENT: TAYLOR MORRISON OF FLORIDA, INC.

DRAINAGE DETAILS (A)

PLAN REVISIONS	
1	07/28/10 REVISED PER SARASOTA COUNTY COMMENTS

FLORIDA CERTIFICATE OF AUTHORIZATION #8636

NICHOLAS B. SPEACH, P.E.
FL CERTIFICATE NO. 70207
12/15/10

SET NUMBER: 225-01-01

SHEET : 17

J:\225-01 Verona Reserve\AutoCAD\225-01-01 Concurrent Subdivision Plans\Rev04\22501017.dwg Dec 14, 2010 - 2:19pm

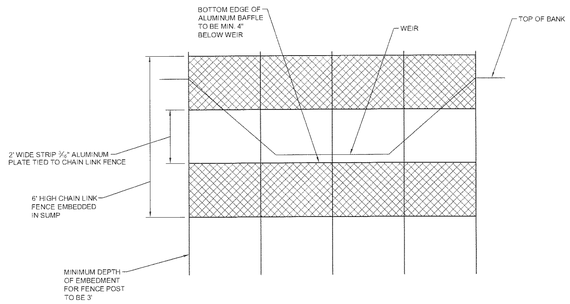

ALUMINUM BAFFLE

N.T.S.

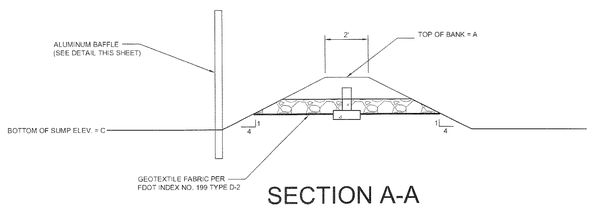

SECTION A-A

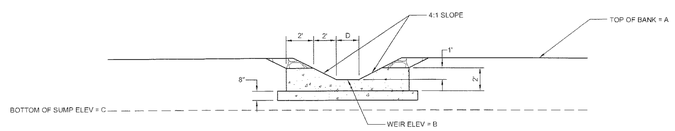

ELEVATION

	A	B	C	D
POND A	14.10	11.85	N/A	12"
WETLAND 1	N/A	11.10	N/A	10"
SUMP B	13.10	11.83	11.10	4"
POND G	13.50	11.02	N/A	4"

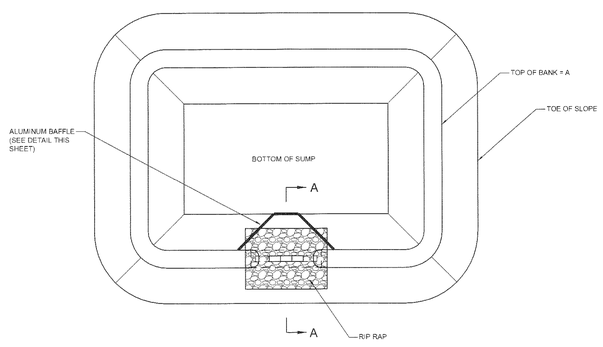

SUMP AND WEIR DETAIL ⚠2

N.T.S.

MINIMUM DIMENSIONS FOR DRAINAGE STRUCTURES	
PIPE SIZE	MINIMUM STRUCTURE WIDTH
15"	3.0 FT
18"	3.0 FT
24"	3.5 FT
30"	4.0 FT
36"	4.5 FT
42"	5.0 FT
48"	5.5 FT
54"	6.0 FT

GENERAL STRUCTURE DESIGN NOTES:

1.) ALL REINFORCING STEEL SHALL HAVE A MINIMUM TWO INCHES OF COVER.

2.) ALL CONCRETE SHALL HAVE COMPRESSIVE STRENGTH OF 3,000 PSI @ 28 DAYS.

GENERAL NOTE

1.) ALL STRUCTURES REQUIRE FIELD POURED CONCRETE INVERT TO ELIMINATE STANDING WATER.

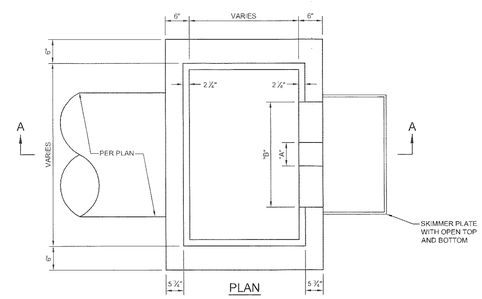

PLAN

CONTROL STRUCTURE	"A"	"B"	"C"	"D"	"E"
CS-A	6.70	18.00	13.50	11.10	11.40
CS-B	1.80	18.00	13.60	11.10	11.71
CS-D	16.08	24.00	13.50	11.10	11.30
CS-I	2.00	60.00	13.50	10.50	11.20
CS-H	7.68	24.00	13.50	10.50	10.96

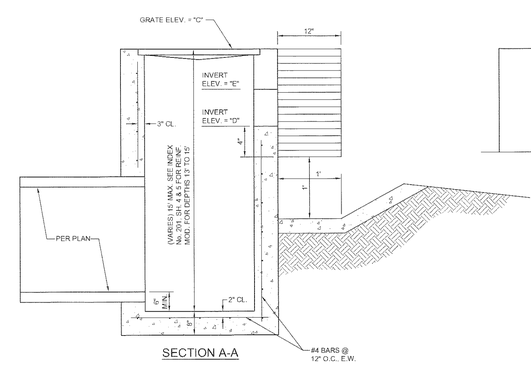

SECTION A-A

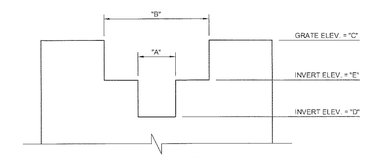

WEIR CUT OUT

CONTROL STRUCTURE ⚠2

N.T.S.

WALDROP ENGINEERING
CIVIL ENGINEERING & LAND DEVELOPMENT CONSULTANTS
28100 BONITA GRANDE DRIVE - SUITE 305 BONITA SPRINGS, FL 34135
P: 239-405-7777 F: 239-405-7899 EMAIL: info@waldropengineering.com

VERONA RESERVE

CLIENT: TAYLOR MORRISON OF FLORIDA, INC.

DRAINAGE DETAILS (B)

PLAN REVISIONS

2	09/14/10	REVISED PER SARASOTA COUNTY COMMENTS
1		

FLORIDA CERTIFICATE OF AUTHORIZATION #8636

NICHOLAS B. SPEACH, P.E.
FL CERTIFICATE NO. 70297
12/5/10

SET NUMBER: 225-01-01

SHEET : 18

J:\225-01 Verona Reserve\Auto\CAD\225-01-01 Concurrent Subdivision Plans\Rev04\225010118.dwg Dec 14, 2010 - 2:19pm

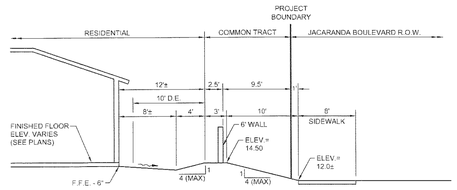

SECTION A-A
N.T.S.

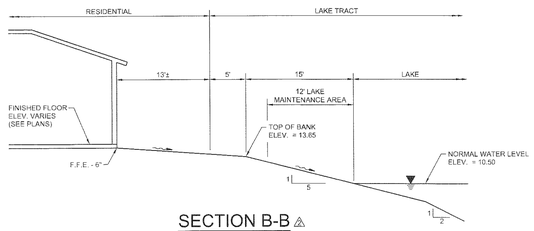

SECTION B-B
N.T.S.

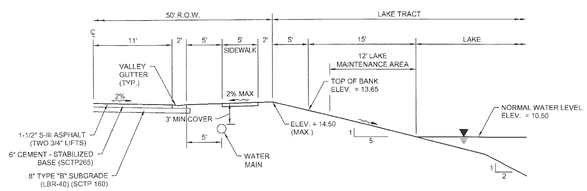

SECTION C-C
N.T.S.

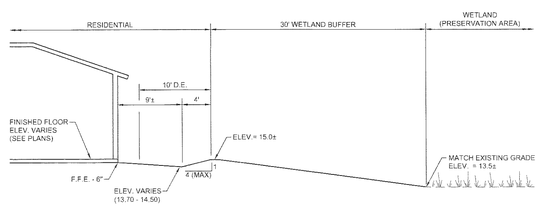

SECTION D-D
N.T.S.

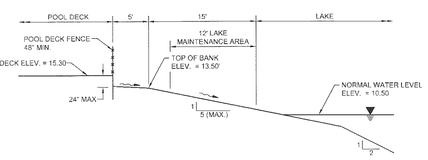

SECTION E-E
N.T.S.

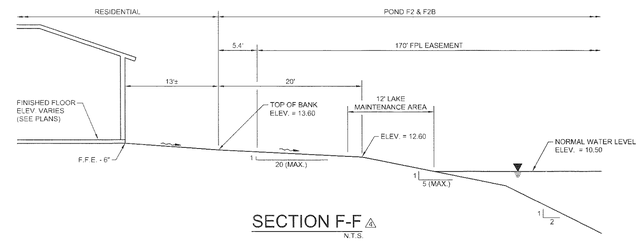

SECTION F-F
N.T.S.

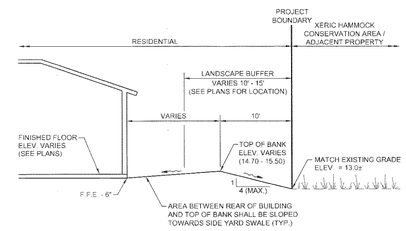

SECTION G-G
N.T.S.

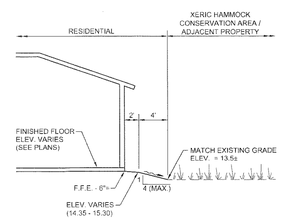

SECTION H-H
N.T.S.

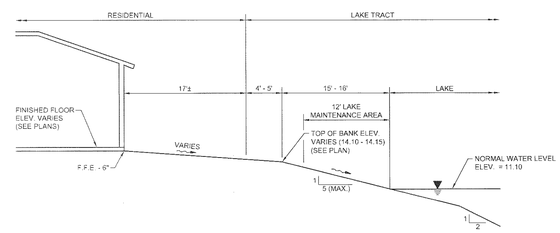

SECTION I-I
N.T.S.

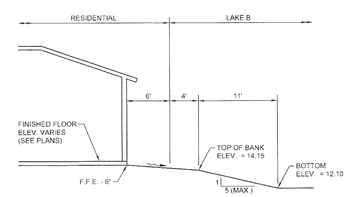

SECTION J-J
N.T.S.

WALDROP ENGINEERING

CIVIL ENGINEERING & LAND DEVELOPMENT CONSULTANTS

28100 BONITA GRANDE DRIVE - SUITE 305 BONITA SPRINGS, FL 34135
P: 239-405-7777 F: 239-405-7699 EMAIL: info@waldropengineering.com

VERONA RESERVE

CLIENT: TAYLOR MORRISON OF FLORIDA, INC.

CROSS SECTIONS (A)

PLAN REVISIONS

1	07/28/10	REVISED PER SARASOTA COUNTY COMMENTS
2	09/14/10	REVISED PER SARASOTA COUNTY COMMENTS
3	10/14/10	REVISED PER CLITN1 COMMENTS

FLORIDA CERTIFICATE OF AUTHORIZATION #6636

NICHOLAS B. SPEACH, P.E. No 70207 STATE OF FLORIDA

NICHOLAS B. SPEACH, P.E.
FL CERTIFICATE NO. 70207 12/15/10

SET NUMBER: 225-01-01

SHEET : 19

J:\225-01 Verona Reserve\Auto\CAD\225-01-01 Concurrent Subdivision Plans\Rev04\225101019.dwg Dec 14, 2010 - 2:19pm

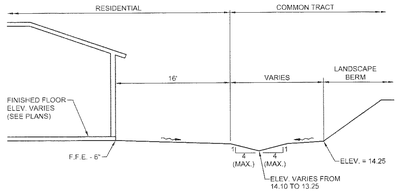

SECTION K-K
N.T.S. 3

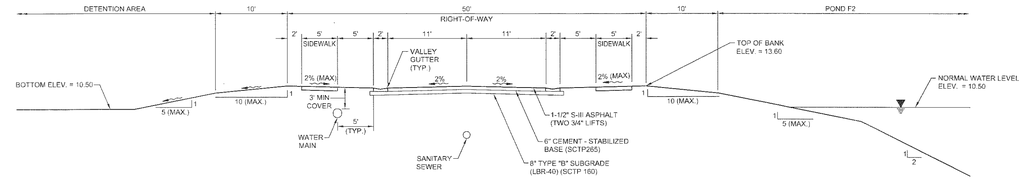

SECTION P-P
N.T.S. 3 4

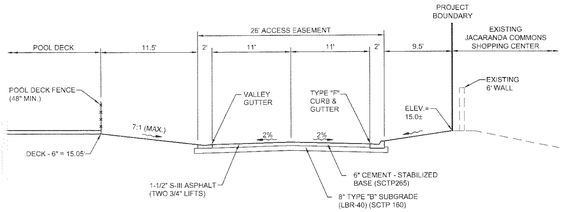

SECTION L-L 3 4
N.T.S.

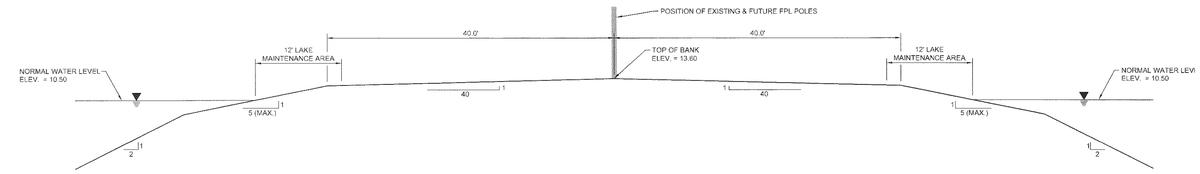

SECTION Q-Q 3
N.T.S.

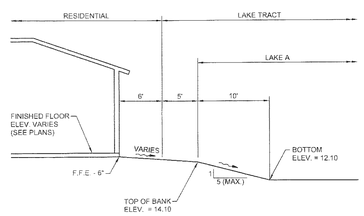

SECTION M-M 3
N.T.S.

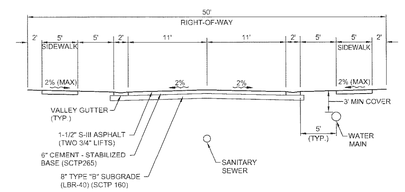

TYPICAL ROADWAY SECTION
N.T.S.

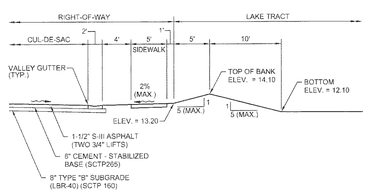

SECTION N-N 3
N.T.S.

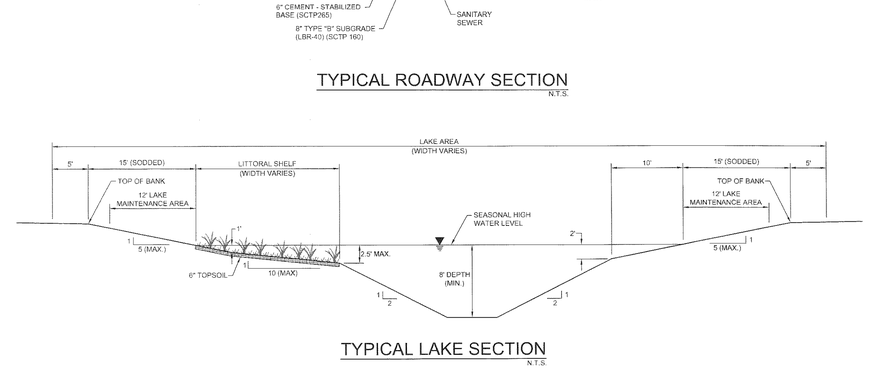

TYPICAL LAKE SECTION
N.T.S.

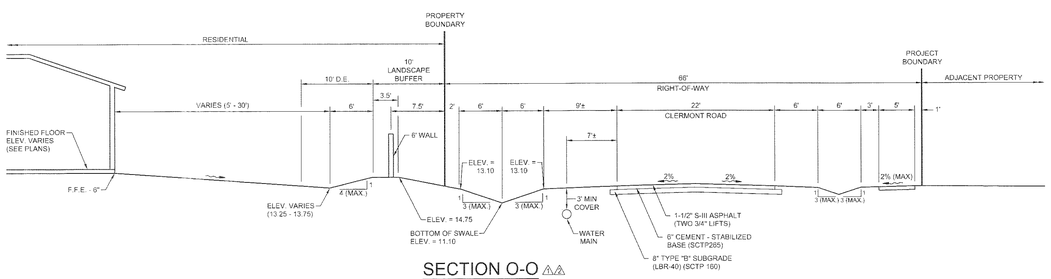

SECTION O-O 3 4
N.T.S.

TYPICAL LAKE AREA NOTES

LITTORAL SHELF

SHELF SHOULD BE VEGETATED WITH DIVERSE EMERGENT PLANTS INCLUDING SUCH SPECIES AS ARROWHEAD, PICKERELWEED, SOFT RUSH, SPIKE RUSH, WATER LILIES, ETC. THE LITTORAL SHELF SHALL BE EQUAL IN AREA TO 35% OF THE NORMAL WATER SURFACE AS REQUIRED FOR STORMWATER TREATMENT OF EACH INDIVIDUAL DETENTION AREA. ALL PLANTS TO BE NURSERY GROWN.

LITTORAL ZONE PLANTING AND MONITORING PLAN

EACH OF THE PROPOSED STORMWATER MANAGEMENT LAKES WILL EXHIBIT A LITTORAL ZONE EQUAL TO AT LEAST 35% OF THE SURFACE AREA OF THE LAKE (AT NORMAL WATER LEVEL). THE AREA OF THE LITTORAL ZONES ARE SHOWN ON THE SITE PLAN AND A TYPICAL CROSS-SECTION OF A LITTORAL ZONE IS ALSO SHOWN. THE RECOMMENDED SPECIES TO BE PLANTED WITHIN EACH LITTORAL AREA ARE LISTED BELOW.

1 BLUE FLAG IRIS, GOLDEN CANNA, SOFT RUSH AND ARROWHEAD: AT A DEPTH OF 0"-12"

2 WATER LILY, PICKEREL WEED, SPIKE RUSH AND BULRUSH: AT A DEPTH OF 12"-24"
NO ONE SPECIES WILL CONSTITUTE MORE THAN 50% OF THE NUMBER OF PLANTS. A MINIMUM OF THREE PLANT SPECIES ARE REQUIRED FOR EACH LITTORAL AREA.
THE PLANTS WILL BE PURCHASED FROM A NURSERY AND THE PLANTINGS WILL BE PLACED AT THREE FEET ON CENTER.

PLANTING SCHEDULE

LITTORAL ZONES SHOULD BE PLANTED DURING THE MONTHS OF APRIL THROUGH SEPTEMBER. LITTORAL ZONES IN LAKES EXCAVATED DURING THESE MONTHS SHALL BE PLANTED WITHIN THIRTY (30) DAYS FOLLOWING EXCAVATION, PROVIDED THAT NORMAL WATER LEVEL IS OR IS LIKELY TO BE ATTAINED WITHIN THAT TIME PERIOD. LITTORAL ZONES IN LAKES EXCAVATED IN OCTOBER THROUGH MARCH SHALL BE PLANTED BY APRIL 30. THE COUNTY RESOURCE PROTECTION SERVICES SHALL BE NOTIFIED UPON COMPLETION OF PLANTING. REQUIRED LITTORAL ZONE VEGETATION SHALL BE MAINTAINED IN PERPETUITY BY THE PROPERTY OWNER. A MONITORING AND MAINTENANCE BOND WILL BE SUBMITTED TO SARASOTA COUNTY RESOURCE PROTECTION TO COVER 100% OF THE COST FOR TWO YEARS OF MONITORING AND MAINTENANCE OF THE LITTORAL ZONES PRIOR TO EXCAVATION PURSUANT TO THE LDR ENVIRONMENTAL TECHNICAL MANUAL SECTION A.10. THIS BOND SHALL REMAIN IN EFFECT UNTIL THE LITTORAL ZONES ARE DETERMINED SUCCESSFUL BY RPS.

WALDROP ENGINEERING
CIVIL ENGINEERING & LAND DEVELOPMENT CONSULTANTS
28100 BONITA GRANDE DRIVE - SUITE 305 BONITA SPRINGS, FL 34135
P: 239-405-7777 F: 239-405-7899 E-MAIL: info@waldropengineering.com

VERONA RESERVE

CLIENT: TAYLOR MORRISON OF FLORIDA, INC.

CROSS SECTIONS (B)

PLAN REVISIONS

1	07/28/10	REVISED PER SARASOTA COUNTY COMMENTS
2	09/14/10	REVISED PER SARASOTA COUNTY COMMENTS
3	12/14/10	REVISED PER CLIENT COMMENTS

FLORIDA CERTIFICATE OF AUTHORIZATION #8636

NICHOLAS B. SPEACH, P.E.
FL CERTIFICATE NO. 70707
12/15/10

SET NUMBER: 225-01-01

SHEET : 20

J:\225-01 Verona Reserve\AutoCAD\225-01-01 Concurrent Subdivision Plans\Rev04\25010120.dwg Dec 14, 2010 - 2:19pm

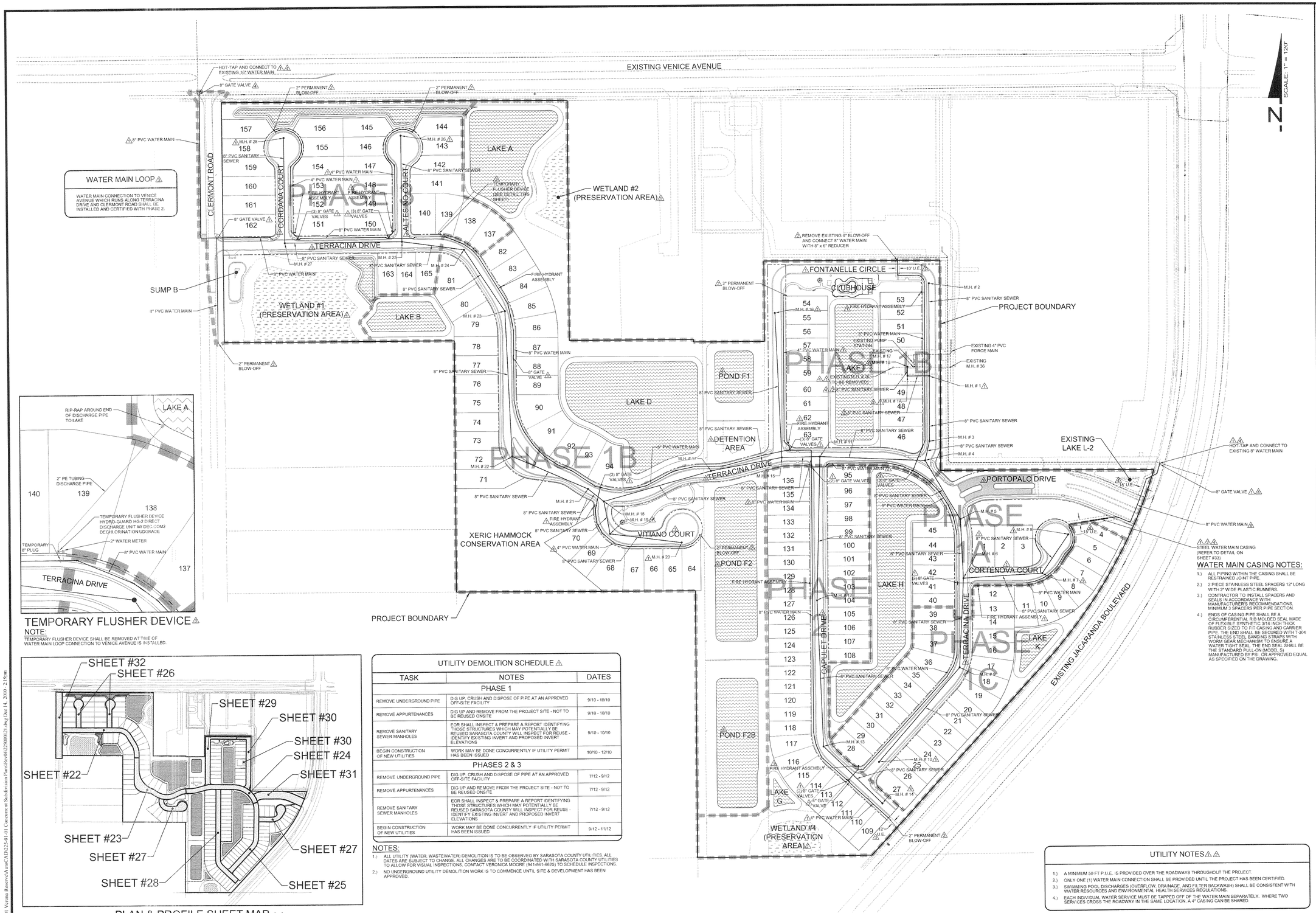

TEMPORARY FLUSHER DEVICE

NOTE:
TEMPORARY FLUSHER DEVICE SHALL BE REMOVED AT TIME OF WATER MAIN LOOP CONNECTION TO VENICE AVENUE IS INSTALLED.

PLAN & PROFILE SHEET MAP

UTILITY DEMOLITION SCHEDULE

TASK	NOTES	DATES
	PHASE 1	
REMOVE UNDERGROUND PIPE	DIG UP, CRUSH AND DISPOSE OF PIPE AT AN APPROVED OFF-SITE FACILITY	9/10 - 10/10
REMOVE APPURTENANCES	DIG UP AND REMOVE FROM THE PROJECT SITE - NOT TO BE REUSED ONSITE	9/10 - 10/10
REMOVE SANITARY SEWER MANHOLES	EOR SHALL INSPECT & PREPARE A REPORT IDENTIFYING THOSE STRUCTURES WHICH MAY POTENTIALLY BE REUSED SARASOTA COUNTY WILL INSPECT FOR REUSE - IDENTIFY EXISTING INVERT AND PROPOSED INVERT ELEVATIONS	9/10 - 10/10
BEGIN CONSTRUCTION OF NEW UTILITIES	WORK MAY BE DONE CONCURRENTLY IF UTILITY PERMIT HAS BEEN ISSUED	10/10 - 12/10
	PHASES 2 & 3	
REMOVE UNDERGROUND PIPE	DIG UP, CRUSH AND DISPOSE OF PIPE AT AN APPROVED OFF-SITE FACILITY	7/12 - 9/12
REMOVE APPURTENANCES	DIG UP AND REMOVE FROM THE PROJECT SITE - NOT TO BE REUSED ONSITE	7/12 - 9/12
REMOVE SANITARY SEWER MANHOLES	EOR SHALL INSPECT & PREPARE A REPORT IDENTIFYING THOSE STRUCTURES WHICH MAY POTENTIALLY BE REUSED SARASOTA COUNTY WILL INSPECT FOR REUSE - IDENTIFY EXISTING INVERT AND PROPOSED INVERT ELEVATIONS	7/12 - 9/12
BEGIN CONSTRUCTION OF NEW UTILITIES	WORK MAY BE DONE CONCURRENTLY IF UTILITY PERMIT HAS BEEN ISSUED	9/12 - 11/12

NOTES:

1.) ALL UTILITY (WATER, WASTEWATER) DEMOLITION IS TO BE OBSERVED BY SARASOTA COUNTY UTILITIES. ALL DATES ARE SUBJECT TO CHANGE. ALL CHANGES ARE TO BE COORDINATED WITH SARASOTA COUNTY UTILITIES TO ALLOW FOR VISUAL INSPECTIONS. CONTACT VERONICA MOORE (941-861-6625) TO SCHEDULE INSPECTIONS.

2.) NO UNDERGROUND UTILITY DEMOLITION WORK IS TO COMMENCE UNTIL SITE & DEVELOPMENT HAS BEEN APPROVED.

UTILITY NOTES

1.) A MINIMUM 50 FT P.U.E. IS PROVIDED OVER THE ROADWAYS THROUGHOUT THE PROJECT.

2.) ONLY ONE (1) WATER MAIN CONNECTION SHALL BE PROVIDED UNTIL THE PROJECT HAS BEEN CERTIFIED.

3.) SWIMMING POOL DISCHARGES (OVERFLOW, DRAINAGE, AND FILTER BACKWASH) SHALL BE CONSISTENT WITH WATER RESOURCES AND ENVIRONMENTAL HEALTH SERVICES REGULATIONS.

4.) EACH INDIVIDUAL WATER SERVICE MUST BE TAPPED OFF OF THE WATER MAIN SEPARATELY. WHERE TWO SERVICES CROSS THE ROADWAY IN THE SAME LOCATION, A 4" CASING CAN BE SHARED.

WATER MAIN CASING NOTES:

1.) ALL PIPING WITHIN THE CASING SHALL BE RESTRAINED JOINT PIPE.

2.) 2 PIECE STAINLESS STEEL SPACERS 12" LONG WITH 2" WIDE PLASTIC RUNNERS.

3.) CONTRACTOR TO INSTALL SPACERS AND SEALS IN ACCORDANCE WITH MANUFACTURER'S RECOMMENDATIONS. MINIMUM 3 SPACERS PER PIPE SECTION.

4.) ENDS OF CASING PIPE SHALL BE A CIRCUMFERENTIAL R/B MOLDED SEAL MADE OF FLEXIBLE SYNTHETIC 3/16 INCH THICK RUBBER SIZED TO FIT CASING AND CARRIER PIPE. THE END SHALL BE SECURED WITH T-304 STAINLESS STEEL SANDING STRAPS WITH WORM GEAR MECHANISM TO ENSURE A WATER TIGHT SEAL. THE END SEAL SHALL BE THE STANDARD PULL-ON (MODEL S) MANUFACTURED BY PSI, OR APPROVED EQUAL AS SPECIFIED ON THE DRAWINGS.

WALDROP ENGINEERING
CIVIL ENGINEERING & LAND DEVELOPMENT CONSULTANTS
28100 BONITA GRANDE DRIVE - SUITE 305 BONITA SPRINGS, FL 34135
P: 239-405-7777 F: 239-405-7599 EMAIL: info@waldropengineering.com

VERONA RESERVE

CLIENT: TAYLOR MORRISON OF FLORIDA, INC.

MASTER UTILITY PLAN

PLAN REVISIONS

1	07/28/10	REVISED PER SARASOTA COUNTY COMMENTS
2	08/14/10	REVISED PER SARASOTA COUNTY COMMENTS
3	10/04/10	REVISED PER SARASOTA COUNTY UTILITY COMMENTS
4	12/14/10	REVISED PER CLIENT & S.C.U. COMMENTS & REVISED FIELD DEVIATION

FLORIDA CERTIFICATE OF AUTHORIZATION #6636

NICHOLAS B. SPEACH P.E. FL CERTIFICATE NO. 70207

12/16/10

SET NUMBER: 225-01-01

SHEET: 21

225-01 Verona Reserve\AutoCAD\225-01-01 Conservation Subdivision Plan\Rec\0423\50\0231.dwg Dec 14, 2010 - 2:19pm

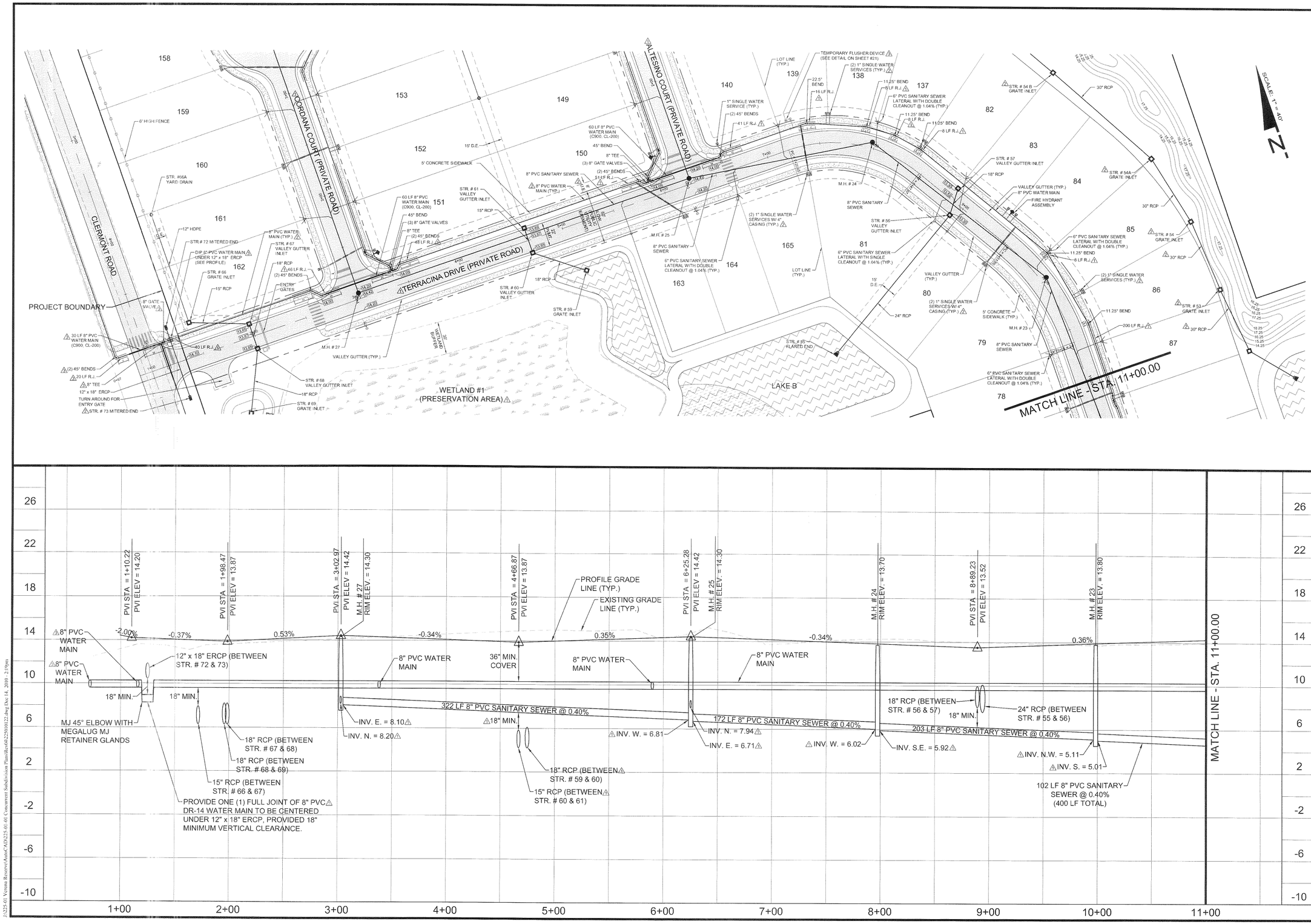

WALDROP ENGINEERING
CIVIL ENGINEERING & LAND DEVELOPMENT CONSULTANTS
28100 BONITA GRANDE DRIVE - SUITE 305 BONITA SPRINGS, FL 34135
P: 239-405-7777 F: 239-405-7899 EMAIL: info@waldropengineering.com

VERONA RESERVE

CLIENT: TAYLOR MORRISON OF FLORIDA, INC.

PLAN AND PROFILE: TERRACINA DRIVE
(STA. 1+00.00 TO STA. 11+00.00)

PLAN REVISIONS

1	07/20/10	REVISED PER SARASOTA COUNTY COMMENTS
2	09/14/10	REVISED PER SARASOTA COUNTY COMMENTS
3	12/04/10	REVISED PER SARASOTA COUNTY UTILITY COMMENTS

FLORIDA CERTIFICATE OF AUTHORIZATION #6636

NICHOLAS B. SPEACH, P.E.
FL CERTIFICATE NO. 70207
12/15/10

SET NUMBER: 225-01-01

SHEET: 22

J:\225-01 Verona Reserve\AutoCAD\225-01-01 Concurrent Subdivision Plans\Rcd\4225901D2.dwg Dec 14, 2010 - 2:19pm

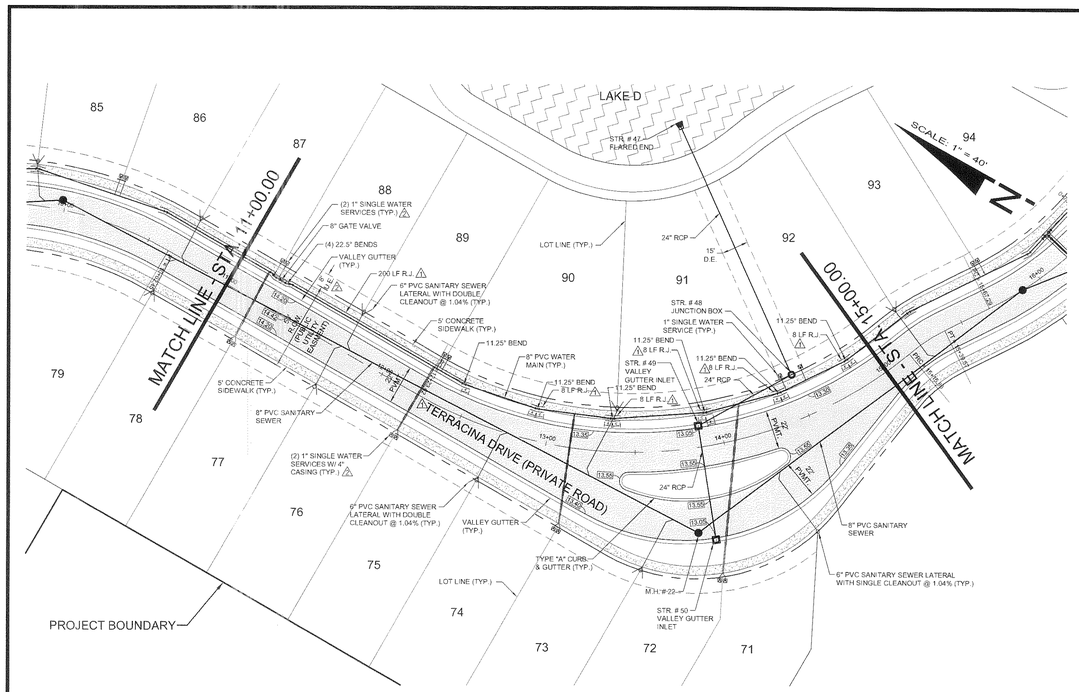

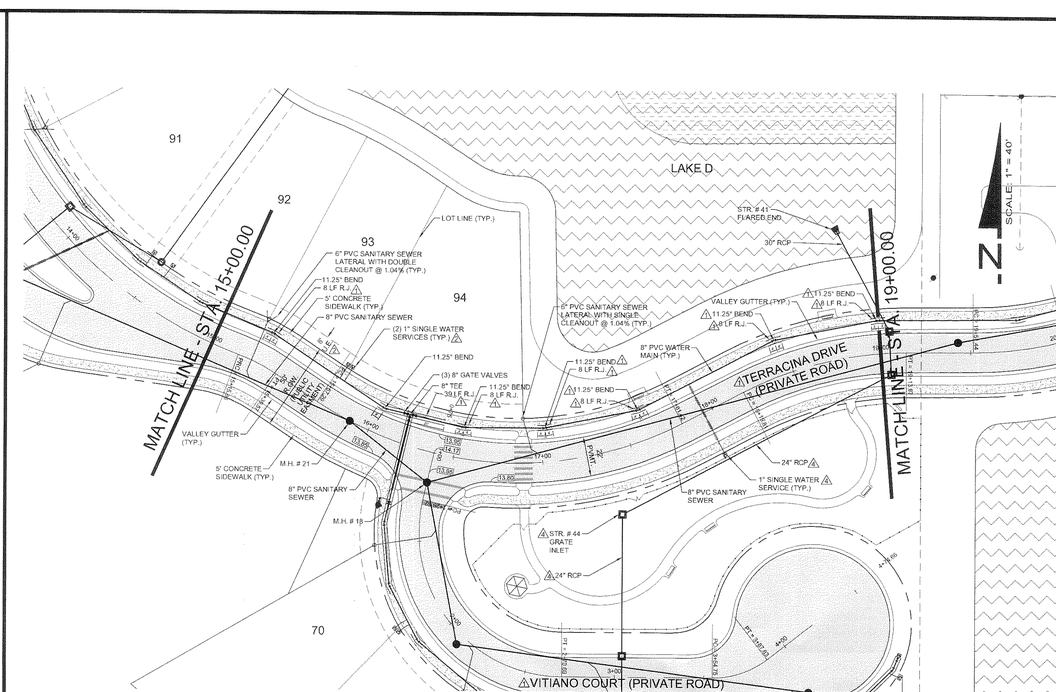

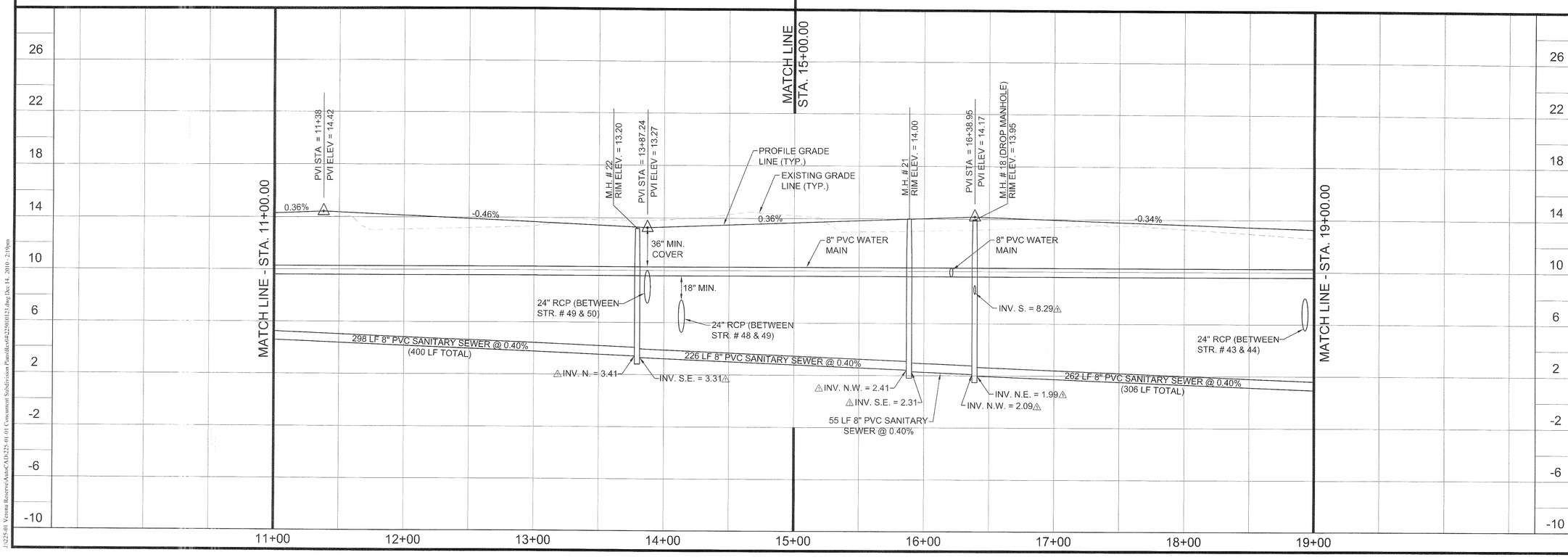

WALDROP ENGINEERING
CIVIL ENGINEERING & LAND DEVELOPMENT CONSULTANTS
28100 BONITA GRANDE DRIVE - SUITE 305 BONITA SPRINGS, FL 34135
P: 239-405-7777 F: 239-405-7999 EMAIL: info@waldropengineering.com

VERONA RESERVE

CLIENT: TAYLOR MORRISON OF FLORIDA, INC.

PLAN AND PROFILE: TERRACINA DRIVE

(STA. 11+00.00 TO STA. 19+00.00)

PLAN REVISIONS

1	07/28/10	REVISED PER SARASOTA COUNTY COMMENTS
2	09/14/10	REVISED PER SARASOTA COUNTY COMMENTS
3	10/04/10	REVISED PER SARASOTA COUNTY UTILITY COMMENTS
4	11/30/10	REVISED PER CLIENT COMMENTS

FLORIDA CERTIFICATE OF AUTHORIZATION #8630

NICHOLAS B. SPEACH, P.E.
FL CERTIFICATE NO. 70207

12/15/10

SET NUMBER: 225-01-01

SHEET: 23

J:\225-01 Verona Reserve\AutoCAD\225-01-01 Concurrent Subdivision Plans\Rel\4225001023.dwg Dec 14, 2010 - 2:09pm

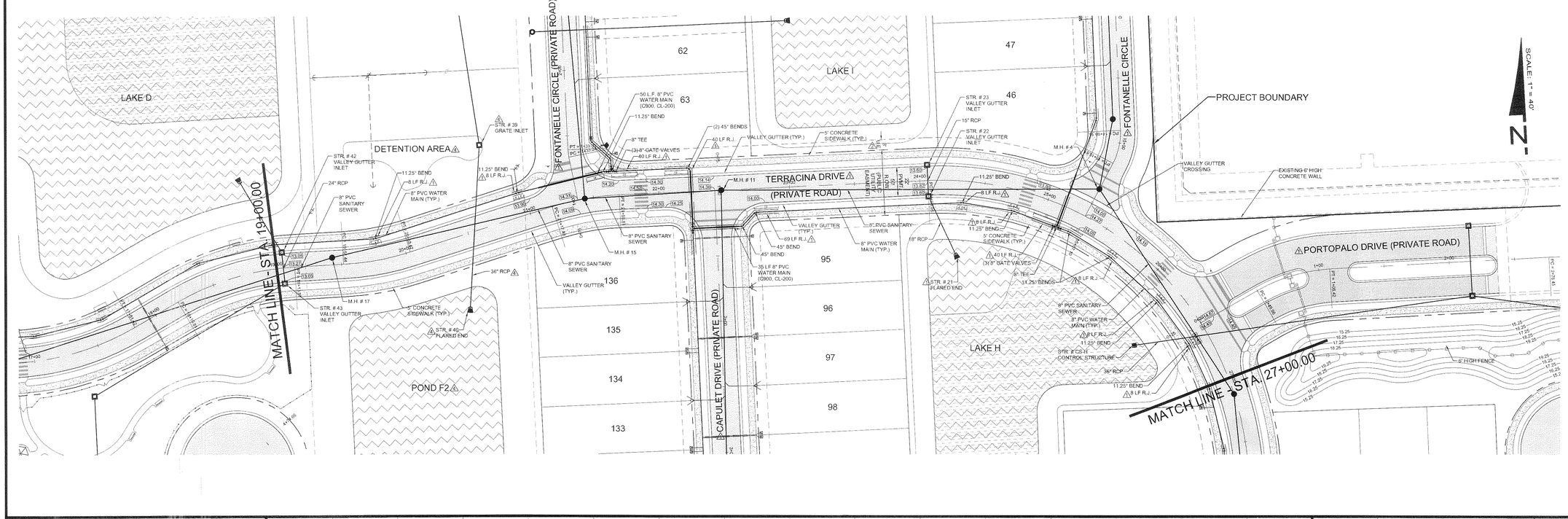

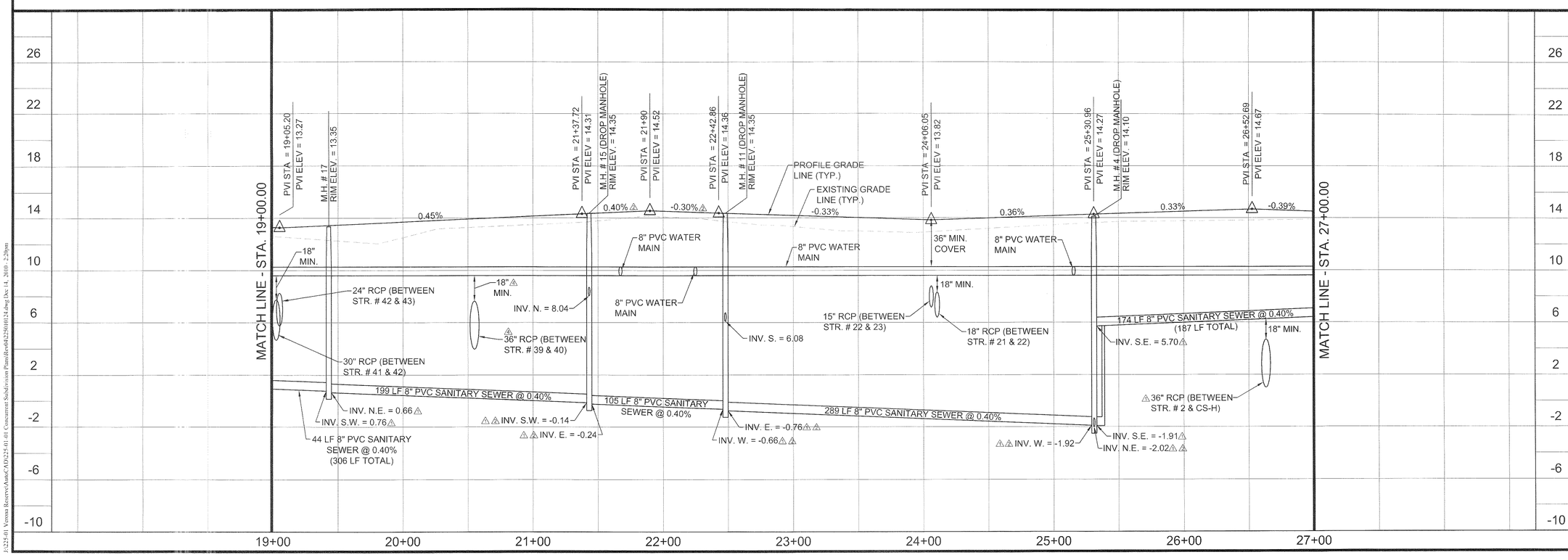

WALDROP ENGINEERING

CIVIL ENGINEERING & LAND DEVELOPMENT CONSULTANTS

25100 BONITA GRANDE DRIVE - SUITE 305 BONITA SPRINGS, FL 34135
P: 239-405-7777 F: 239-405-7899 EMAIL: info@waldropengineering.com

VERONA RESERVE

CLIENT: TAYLOR MORRISON OF FLORIDA, INC.

PLAN AND PROFILE: TERRACINA DRIVE
(STA. 19+00.00 TO STA. 27+00.00)

PLAN REVISIONS

1	07/28/10	REVISED PER SARASOTA COUNTY COMMENTS
2	09/14/10	REVISED PER SARASOTA COUNTY COMMENTS
3	10/04/10	REVISED PER SARASOTA COUNTY UTILITY COMMENTS
4	12/14/10	REVISED PER CLIENT COMMENTS

FLORIDA CERTIFICATE OF AUTHORIZATION #6616

NICHOLAS B. SPEACH, P.E.
FL CERTIFICATE NO. 70207
12/15/10

SET NUMBER: 225-01-01

SHEET: 24

J:\225-01 Verona Reserve\Autoc\AD225-01 Concurrent Subdivision Plans\Revised\225010124.dwg Dec 14, 2010 - 2:29pm

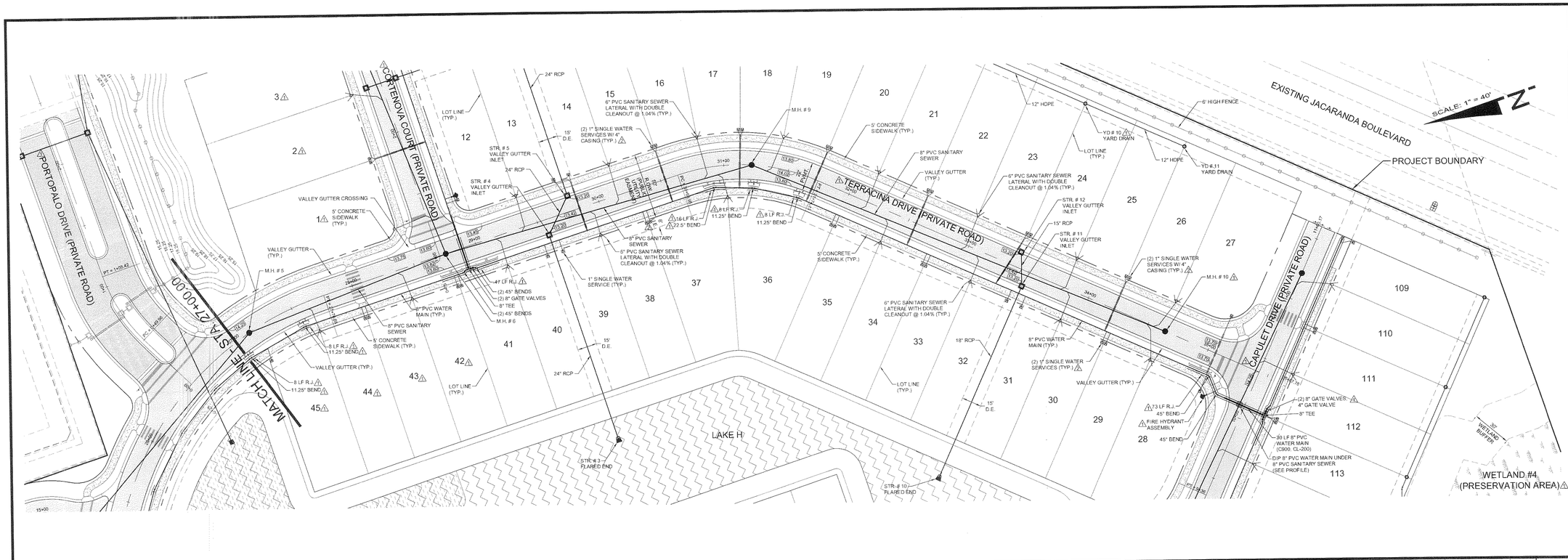

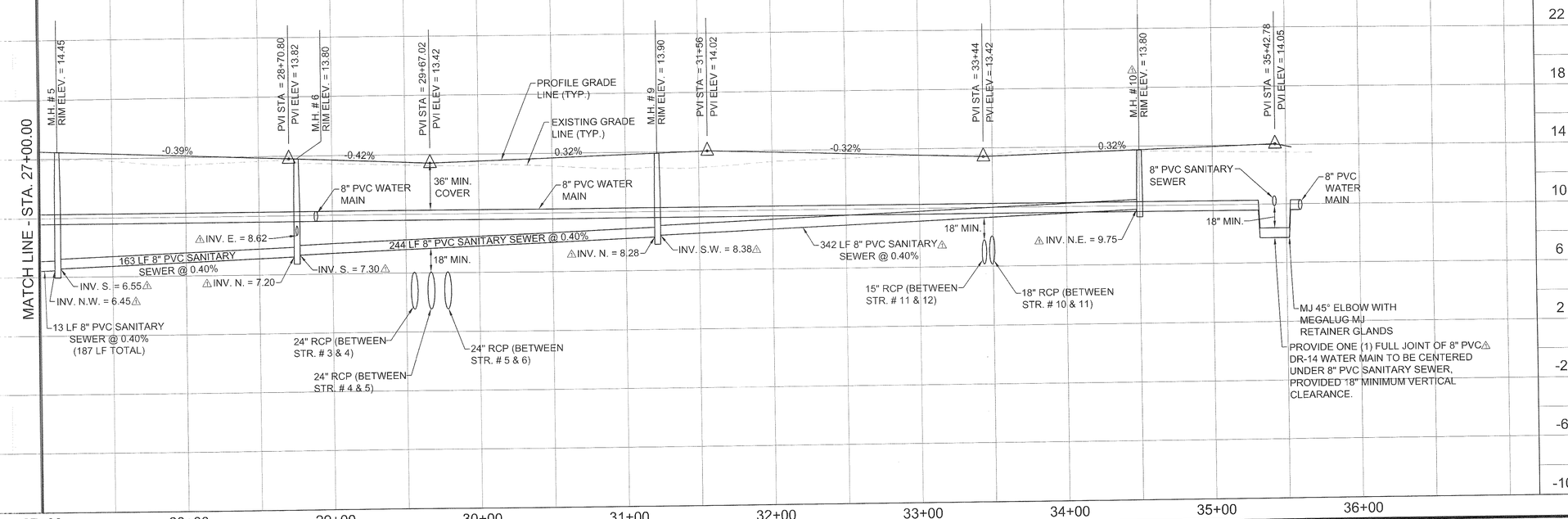

WALDROP ENGINEERING

CIVIL ENGINEERING & LAND DEVELOPMENT CONSULTANTS

28100 BONITA GRANDE DRIVE - SUITE 305 BONITA SPRINGS, FL 34135
P: 239-405-7777 F: 239-405-7899 EMAIL: info@waldropengineering.com

VERONA RESERVE

CLIENT: TAYLOR MORRISON OF FLORIDA, INC.

PLAN AND PROFILE: TERRACINA DRIVE
(STA. 27+00.00 TO END)

PLAN REVISIONS

1	07/28/10	REVISED PER SARASOTA COUNTY COMMENTS
2	09/14/10	REVISED PER SARASOTA COUNTY COMMENTS
3	10/04/10	REVISED PER SARASOTA COUNTY UTILITY COMMENTS

FLORIDA CERTIFICATE OF AUTHORIZATION 6563

NICHOLAS R. SPIACH LICENSED No 70207 STATE OF FLORIDA

NICHOLAS R. SPIACH, P.E.
FL CERTIFICATE NO. 70207

12/15/10

SET NUMBER: 225-01-01

SHEET : 25

1225-01 Verona Reserve\Autod\A1P225-01-01 Concurrent Subdivision Plans\Rev04\25001025.dwg Dec 14, 2010 - 2:20pm

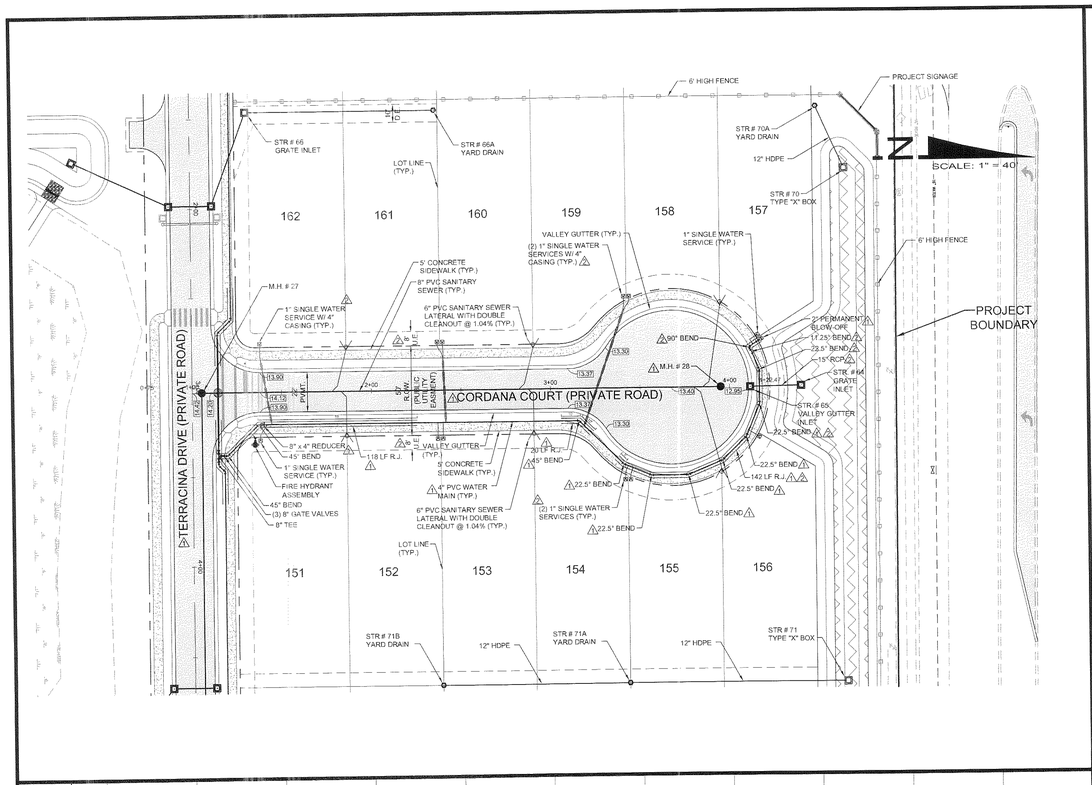

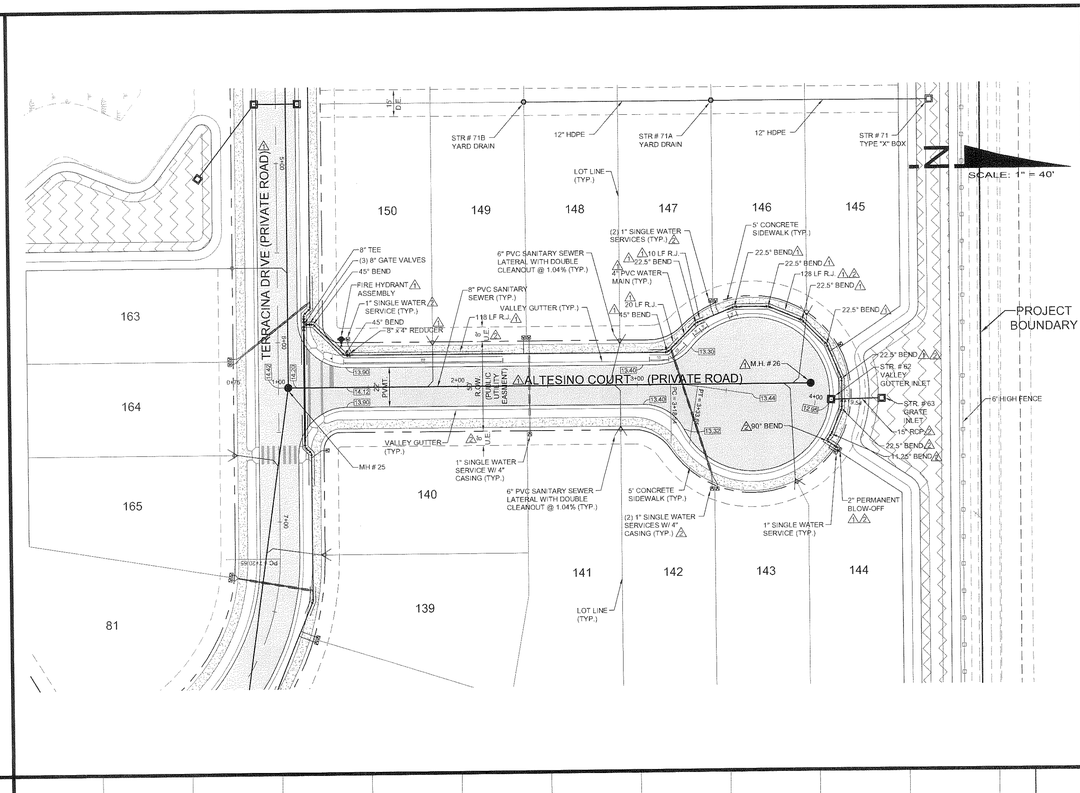

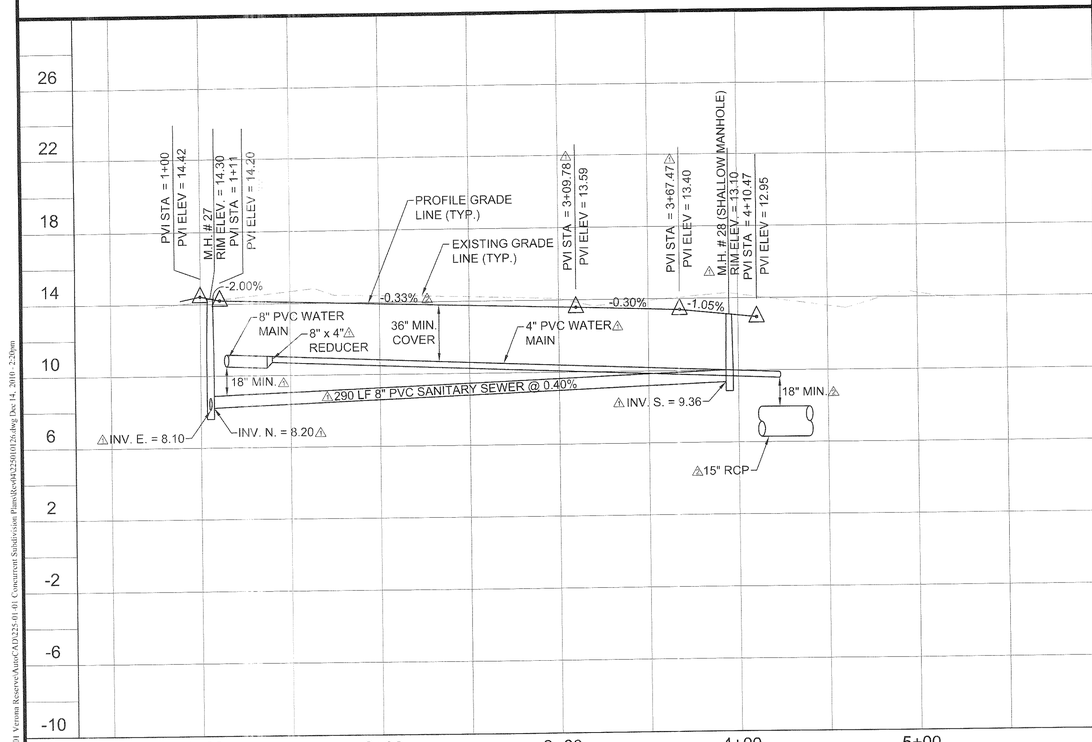

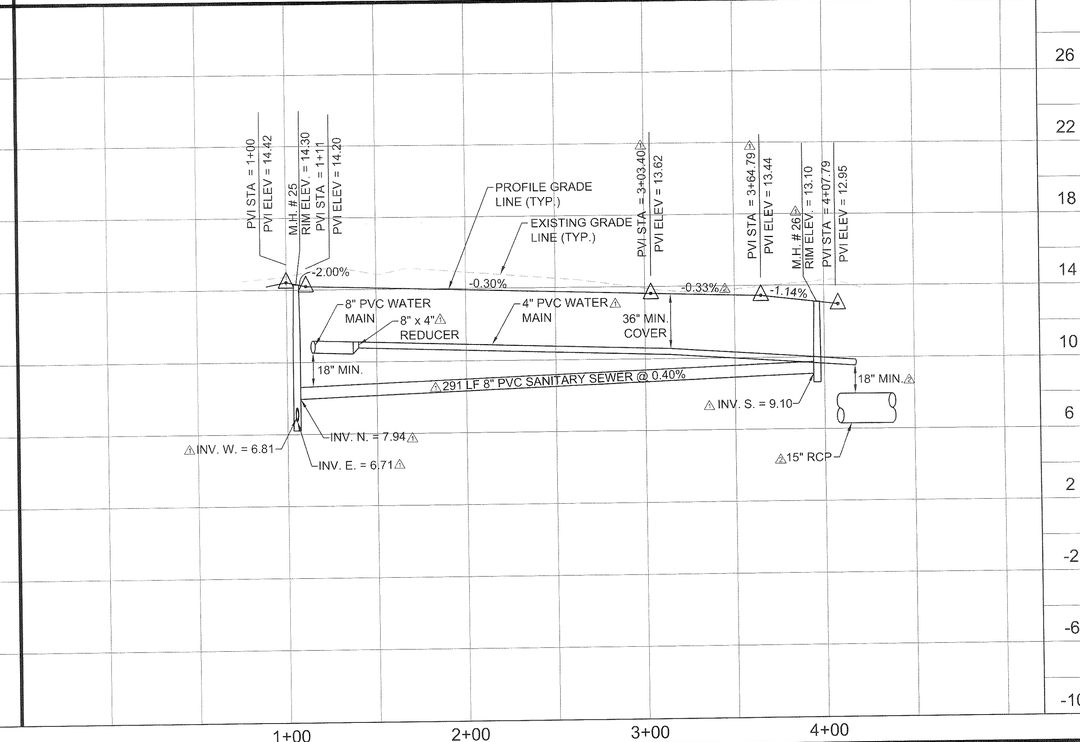

WALDROP ENGINEERING
CIVIL ENGINEERING & LAND DEVELOPMENT CONSULTANTS
28100 BONITA GRANDE DRIVE - SUITE 305 BONITA SPRINGS, FL 34135
P: 239-405-7777 F: 239-405-7899 EMAIL: info@waldropengineering.com

VERONA RESERVE

CLIENT: TAYLOR MORRISON OF FLORIDA, INC.

PLAN AND PROFILE: CORDANA COURT (STA. 1+00.00 TO END)

PLAN AND PROFILE: ALTESINO COURT (STA. 1+00.00 TO END)

PLAN REVISIONS

1	07/28/10	REVISED PER SARASOTA COUNTY COMMENTS
2	09/14/10	REVISED PER SARASOTA COUNTY COMMENTS
3	10/04/10	REVISED PER SARASOTA COUNTY UTILITY COMMENTS

FLORIDA CERTIFICATE OF AUTHORIZATION #8636

NICHOLAS T. SPEACH P.E. 12/15/10
FL CERTIFICATE NO. 70207

SET NUMBER: 225-01-01

SHEET : 26

J:\225-01 Verona Reserve\Acad\CAD\225-01-01 Concurrent Subdivision Plans\Rev04\25001026.dwg Dec 14, 2010 - 2:20pm

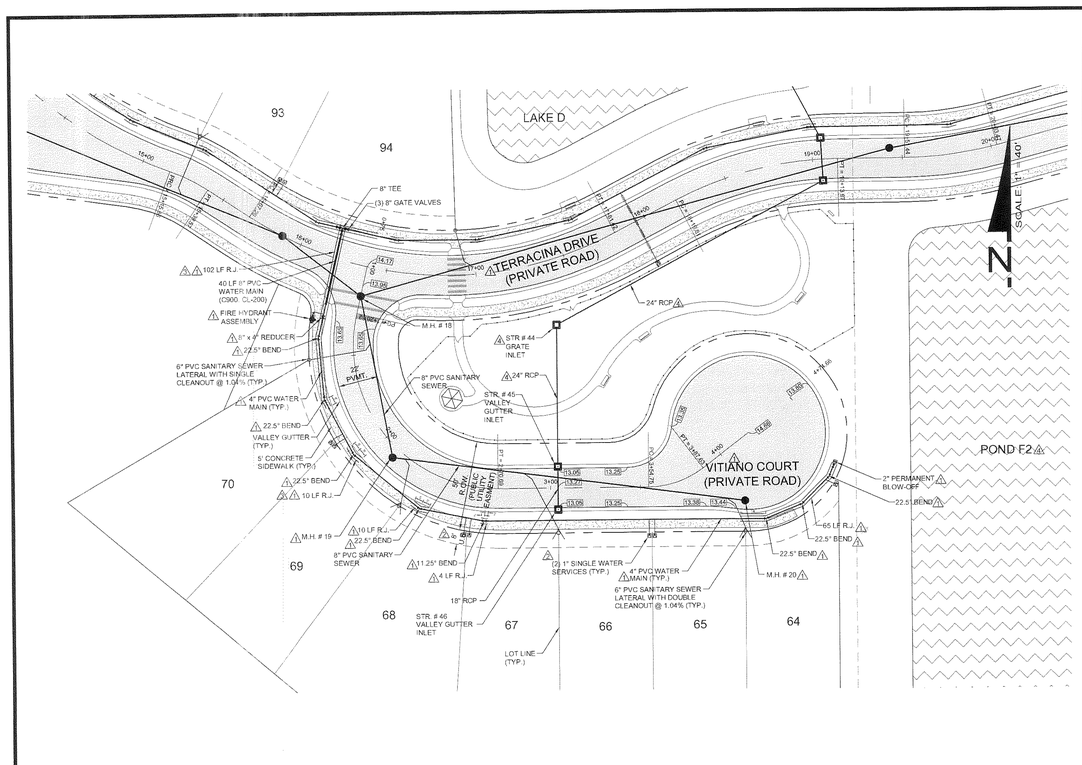

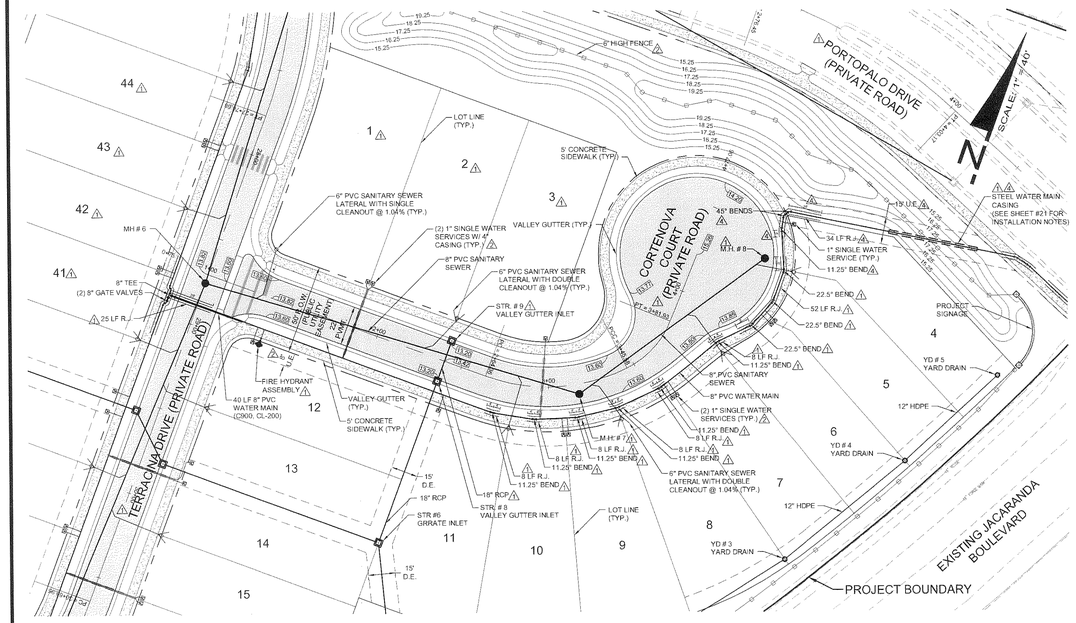

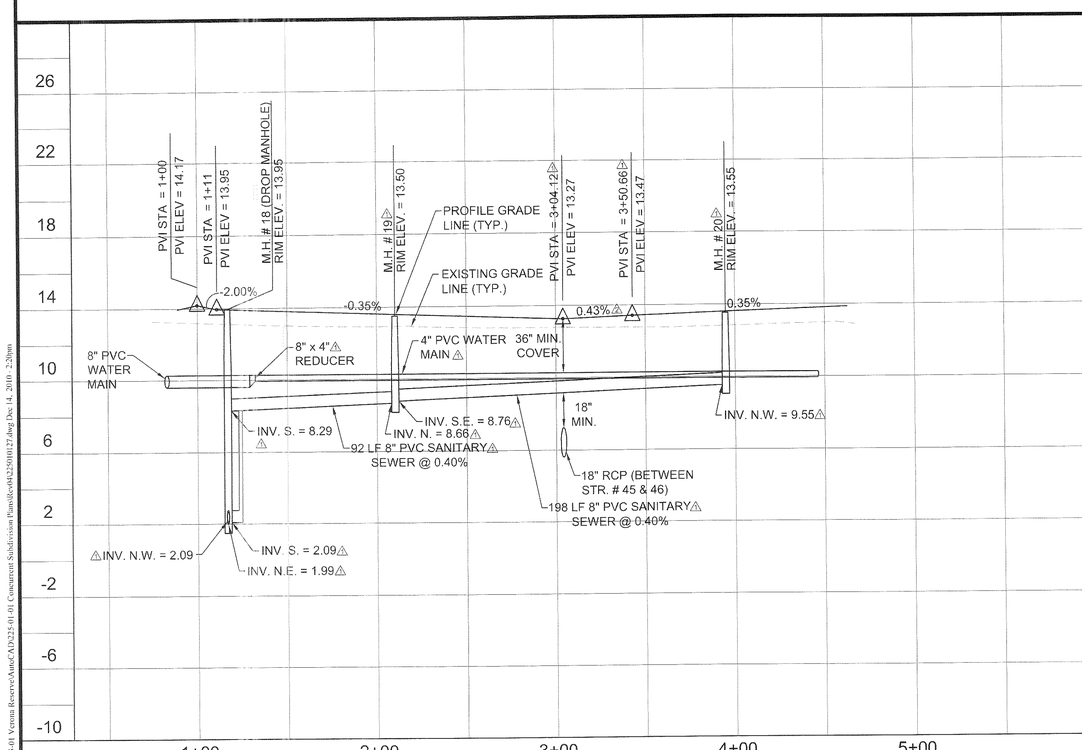

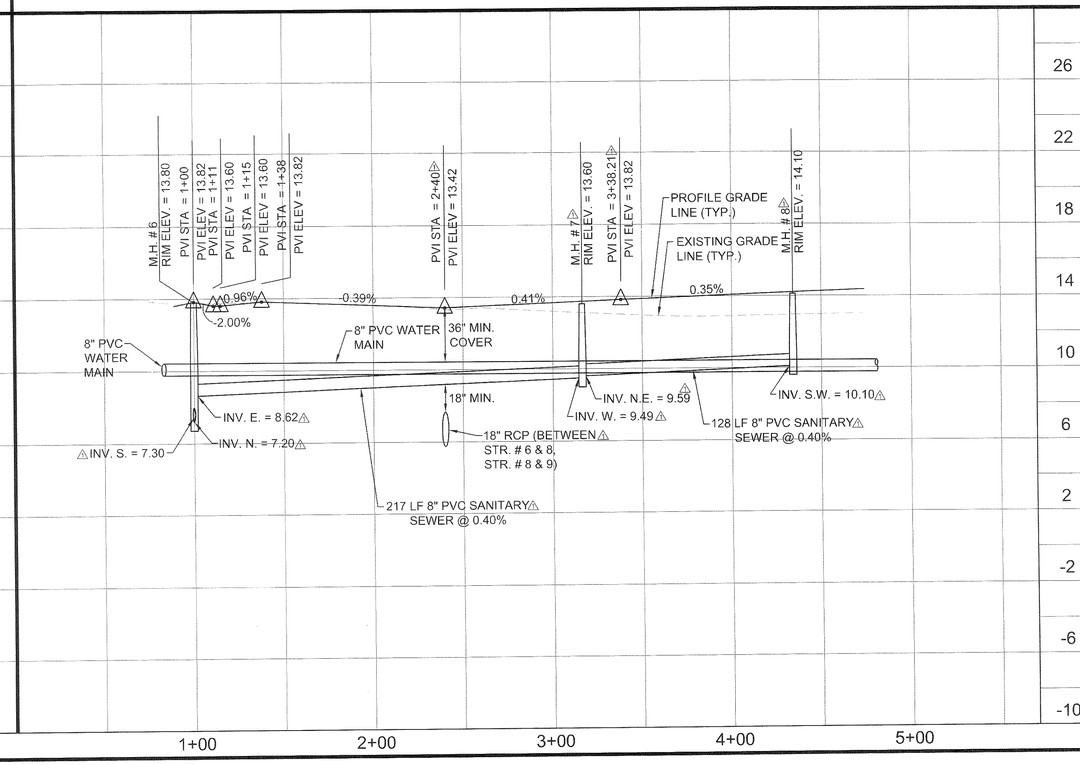

WALDROP ENGINEERING
CIVIL ENGINEERING & LAND DEVELOPMENT CONSULTANTS
28100 BONITA GRANDE DRIVE - SUITE 305 BONITA SPRINGS, FL 34135
P: 239-405-7777 F: 239-405-7899 EMAIL: info@waldropengineering.com

VERONA RESERVE

CLIENT: TAYLOR MORRISON OF FLORIDA, INC.

PLAN AND PROFILE: VITIANO COURT (STA. 1+00.00 TO END)

PLAN AND PROFILE: CORTENOVA COURT (STA. 1+00.00 TO END)

PLAN REVISIONS

1	07/28/10	REVISED PER SARASOTA COUNTY COMMENTS
2	09/14/10	REVISED PER SARASOTA COUNTY COMMENTS
3	10/04/10	REVISED PER SARASOTA COUNTY UTILITY COMMENTS
4	12/14/10	REVISED PER CLIENT & SARASOTA COUNTY UTILITY COMMENTS

FLORIDA CERTIFICATE OF AUTHORIZATION #8656

STATE OF FLORIDA NICHOLAS B. SPEACH LICENSE No 70207

NICHOLAS B. SPEACH, P.E.
FL CERTIFICATE NO. 70207

12/15/10

SET NUMBER: 225-01-01

SHEET : 27

J:\225-01 Verona Reserve\AutoCAD\225-01-01 Concurrent Subdivision Plans\Rev04\225090127.dwg Dec 14, 2010 - 2:20pm

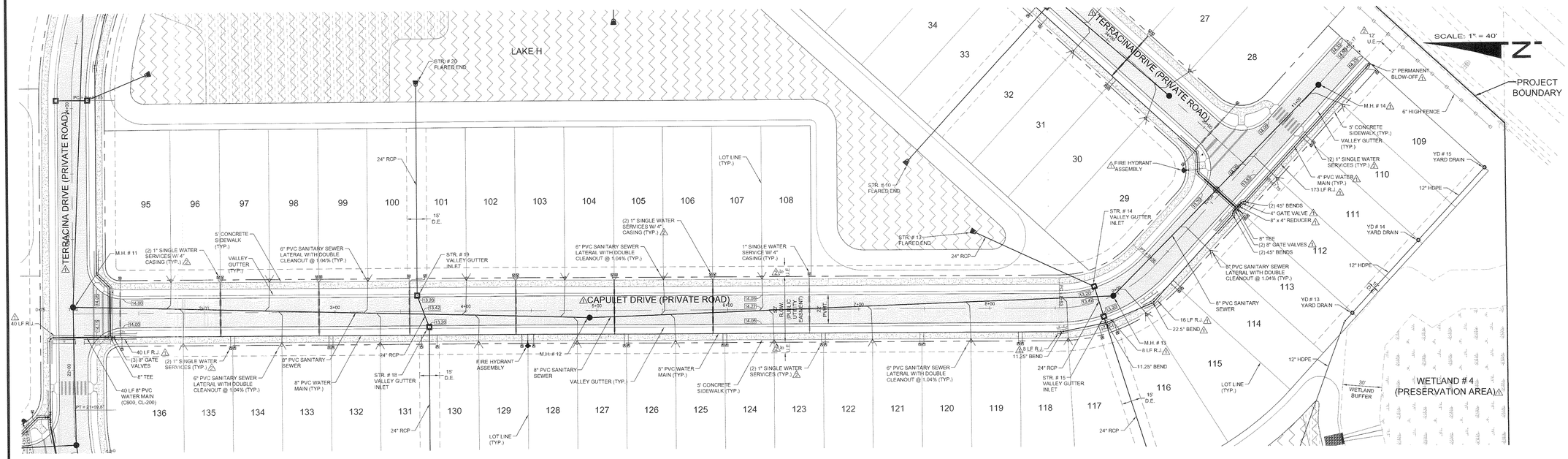

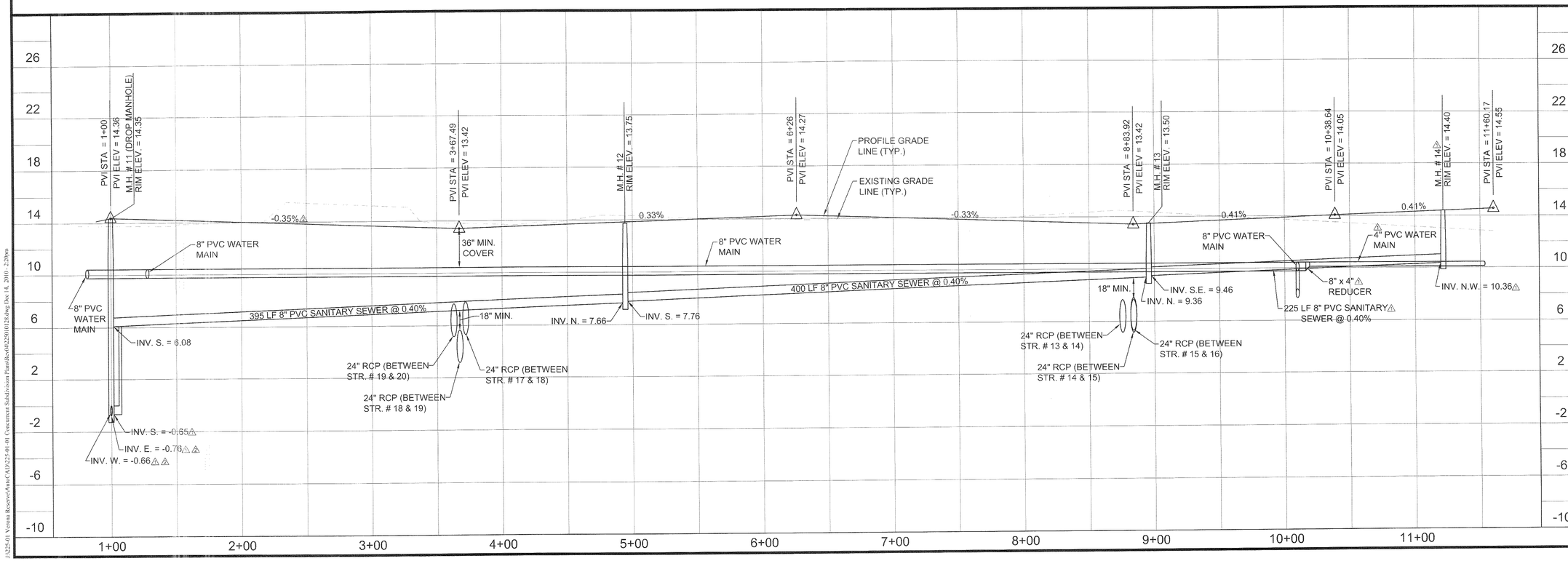

WALDROP ENGINEERING
CIVIL ENGINEERING & LAND DEVELOPMENT CONSULTANTS
28100 BONITA GRANDE DRIVE - SUITE 305 BONITA SPRINGS, FL 34135
P: 239-405-7777 F: 239-405-7899 EMAIL: info@waldropengineering.com

VERONA RESERVE

CLIENT: TAYLOR MORRISON OF FLORIDA, INC.

PLAN AND PROFILE: CAPULET DRIVE ▷
(STA. 1+00.00 TO END)

PLAN REVISIONS

1	07/28/10	REVISED PER SARASOTA COUNTY COMMENTS
2	09/14/10	REVISED PER SARASOTA COUNTY COMMENTS
3	10/04/10	REVISED PER SARASOTA COUNTY UTILITY COMMENTS

FLORIDA CERTIFICATE OF AUTHORIZATION 18636

NICHOLAS B. SPEACH, P.E.
FL CERTIFICATE NO. 70207
12/15/10

SET NUMBER: 225-01-01

SHEET: 28

J:\225-01 Verona Reserve\Auto\CAD\225-01-01 Concurrent Subdivision Plans\dwg\0822501020.dwg Dec 14, 2010 - 2:20pm

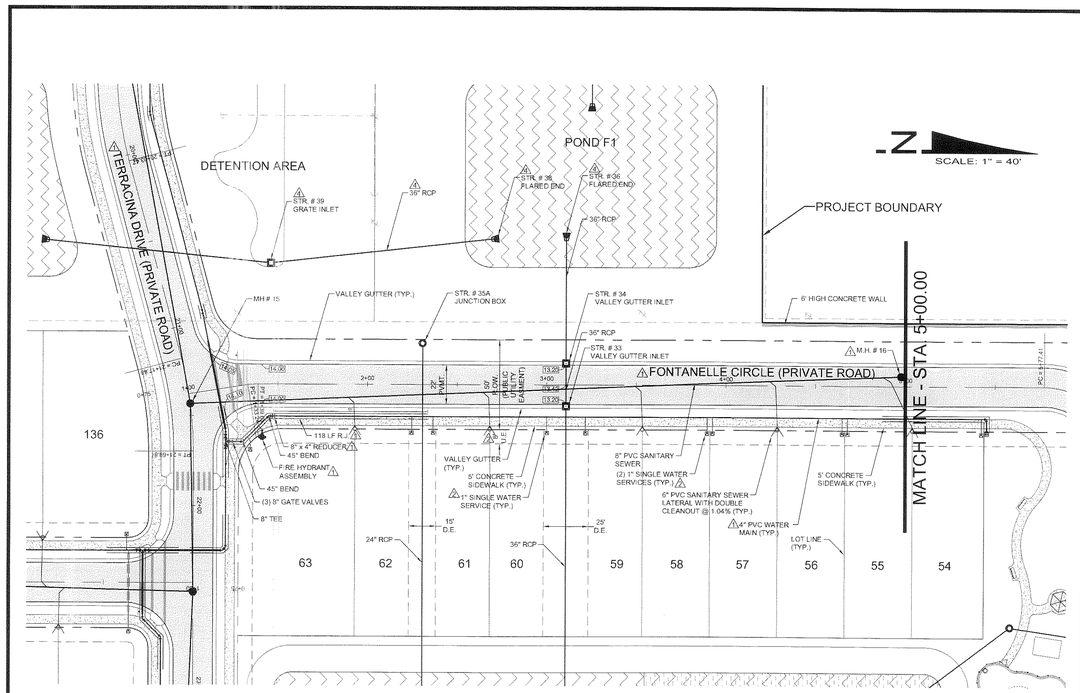

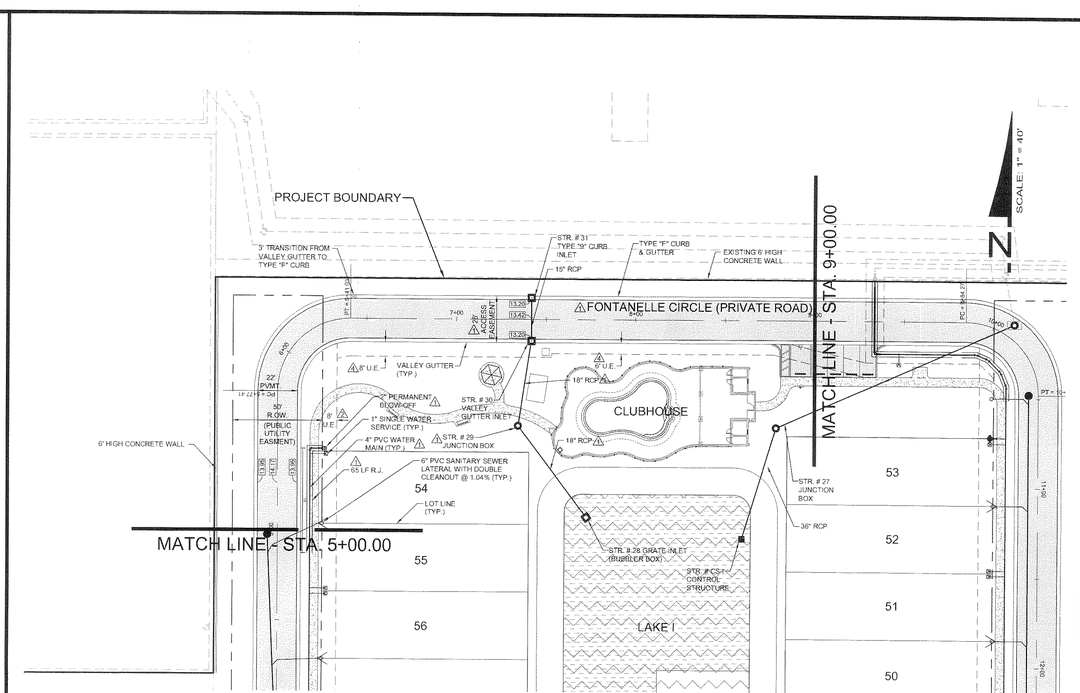

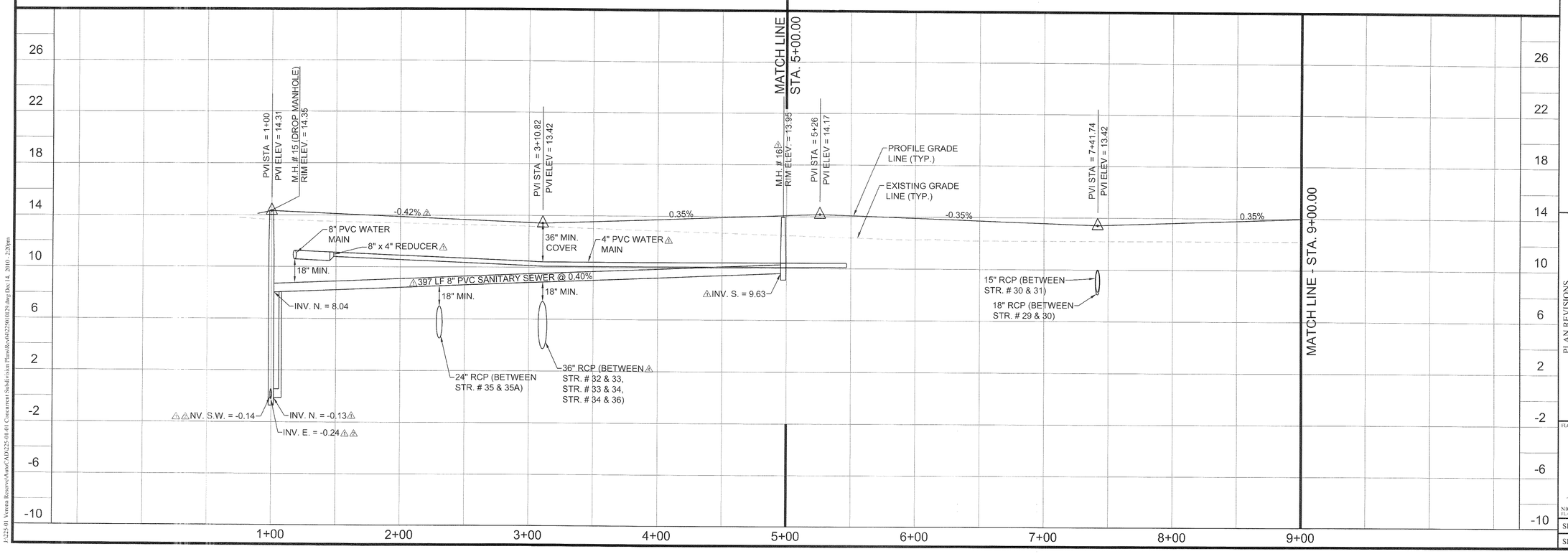

WALDROP ENGINEERING
CIVIL ENGINEERING & LAND DEVELOPMENT CONSULTANTS
28100 BONITA GRANDE DRIVE - SUITE 305 BONITA SPRINGS, FL 34135
P: 239-405-7777 F: 239-405-7899 EMAIL: info@waldropengineering.com

VERONA RESERVE

CLIENT: TAYLOR MORRISON OF FLORIDA, INC.

PLAN AND PROFILE: FONTANELLE CIRCLE

(STA. 1+00.00 TO STA. 9+00.00)

PLAN REVISIONS

1	07/20/10	REVISED PER SARASOTA COUNTY COMMENTS
2	09/14/10	REVISED PER SARASOTA COUNTY COMMENTS
3	10/04/10	REVISED PER SARASOTA COUNTY UTILITY COMMENTS
4	10/14/10	REVISED PER CLIENT COMMENTS

FLORIDA CERTIFICATE OF AUTHORIZATION #8636

NICHOLAS B. SPEACH, P.E.
FL CERTIFICATE NO. 70207

SET NUMBER: 225-01-01

SHEET: 29

J:\225-01 Verona Reserve\Autoc\CAD\225-01-01 Concurrent Subdivision Plans\Rev04\225001D29.dwg Dec 14, 2010 - 2:20pm

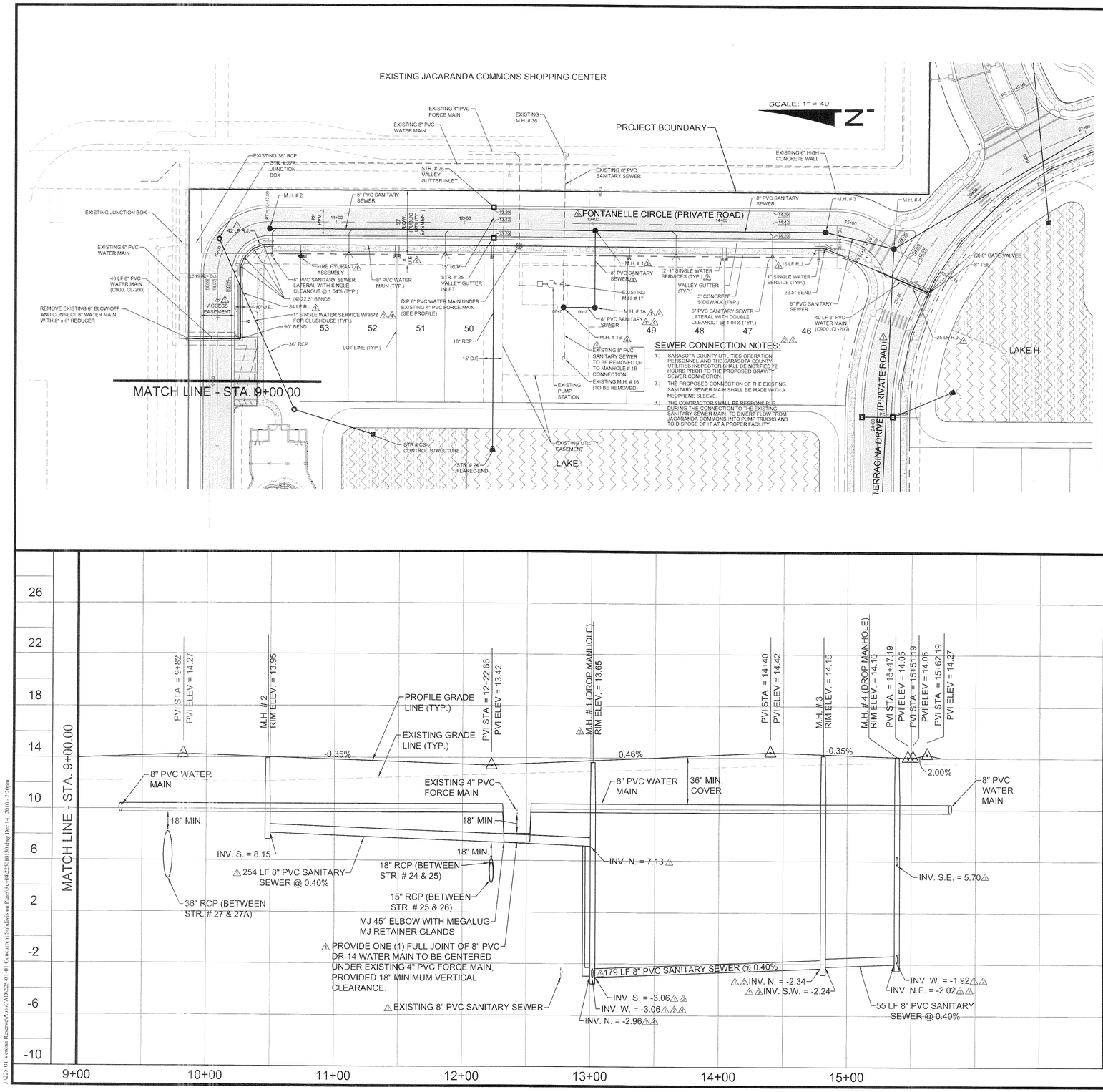

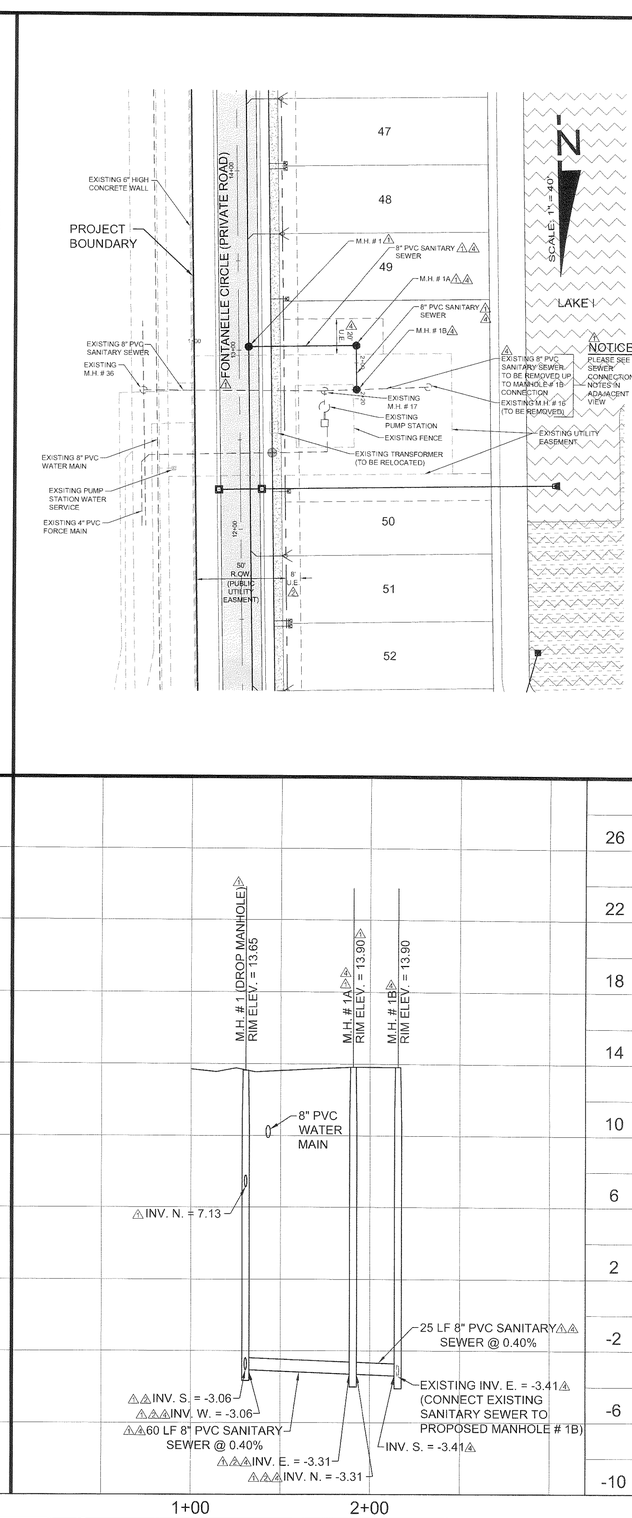

WALDROP ENGINEERING

CIVIL ENGINEERING & LAND DEVELOPMENT CONSULTANTS

258100 BONITA GRANDE DRIVE - SUITE 305 BONITA SPRINGS, FL 34135
P: 239-405-7777 F: 239-405-7899 EMAIL: info@waldropengineering.com

VERONA RESERVE

CLIENT: TAYLOR MORRISON OF FLORIDA, INC.

PLAN AND PROFILE: FONTANELLE CIRCLE (STA. 9+00.00 TO END)

PLAN AND PROFILE: PUMP STATION (1+00.00 TO END)

PLAN REVISIONS

1	07/28/10	REVISED PER SARASOTA COUNTY COMMENTS
2	09/14/10	REVISED PER SARASOTA COUNTY COMMENTS
3	10/04/10	REVISED PER SARASOTA COUNTY UTILITY COMMENTS
4	10/19/10	REVISED PER S.C.U. COMMENTS & REVISED FIELD DEVIATION

FLORIDA CERTIFICATE OF AUTHORIZATION #8636

STATE OF FLORIDA NICHOLAS B. SPEACH LICENSED No 70207

NICHOLAS B. SPEACH, P.E.
FL CERTIFICATE NO. 70207

12/5/10

SET NUMBER: 225-01-01

SHEET : 30

J:\225-01 Verona Reserve\AutoCAD\225-01-01 Concurrent Subdivision Plans\Rev04\225001D.dwg Dec 14, 2010 - 2:20pm

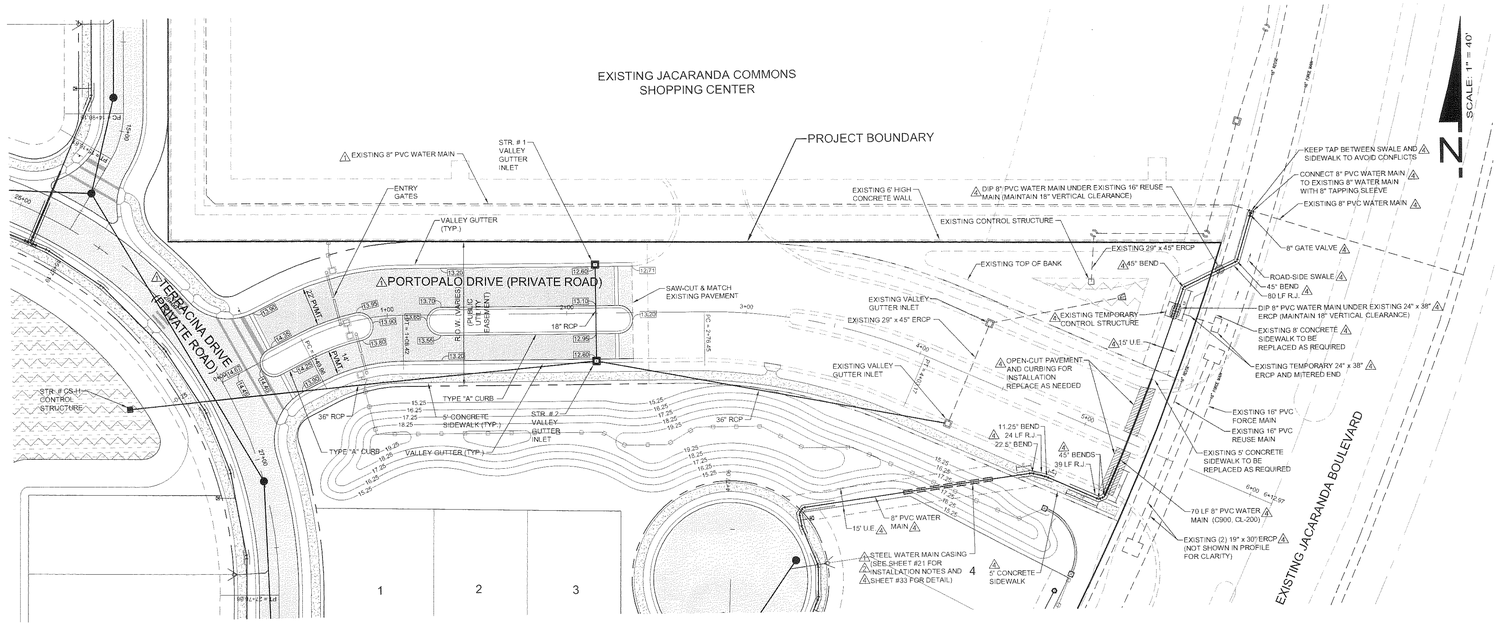

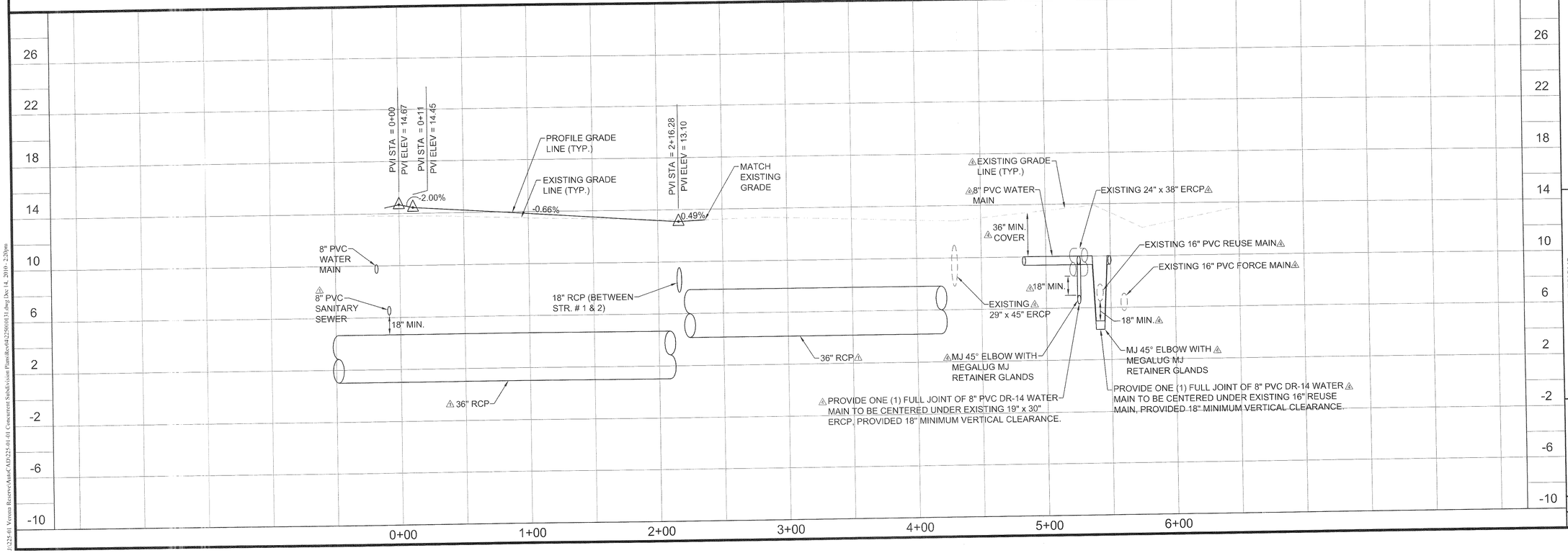

WALDROP ENGINEERING
CIVIL ENGINEERING & LAND DEVELOPMENT CONSULTANTS
28100 BONITA GRANDE DRIVE, SUITE 305 BONITA SPRINGS, FL 34135
P: 239-405-7777 F: 239-405-7899 EMAIL: info@waldropengineering.com

VERONA RESERVE

CLIENT: TAYLOR MORRISON OF FLORIDA, INC.

PLAN AND PROFILE: PORTOPALO DRIVE
(STA. 0+00 TO END)

PLAN REVISIONS

1	07/29/10	REVISED PER SARASOTA COUNTY COMMENTS
2	09/14/10	REVISED PER SARASOTA COUNTY COMMENTS
3	10/04/10	REVISED PER SARASOTA COUNTY UTILITY COMMENTS
4	11/30/10	REVISED PER SARASOTA COUNTY UTILITY COMMENTS

FLORIDA CERTIFICATE OF AUTHORIZATION #8636

NICHOLAS B. SPRACH, P.E.
FL CERTIFICATE NO. 70207

12/15/10

SET NUMBER: 225-01-01

SHEET: 31

J:\225-01 Verona Reserve\AutoCAD\225-01-01 Concurrent Subdivision Plans\Rev04\225001E31.dwg Dec 14, 2010 - 2:20pm

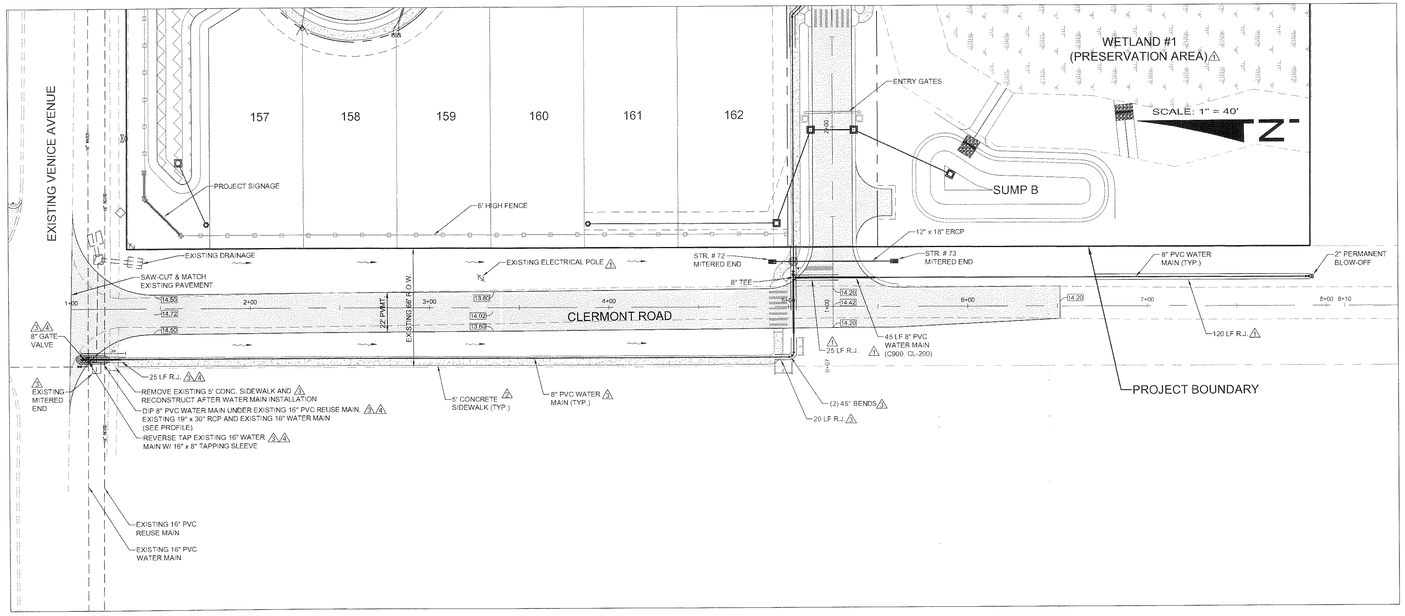

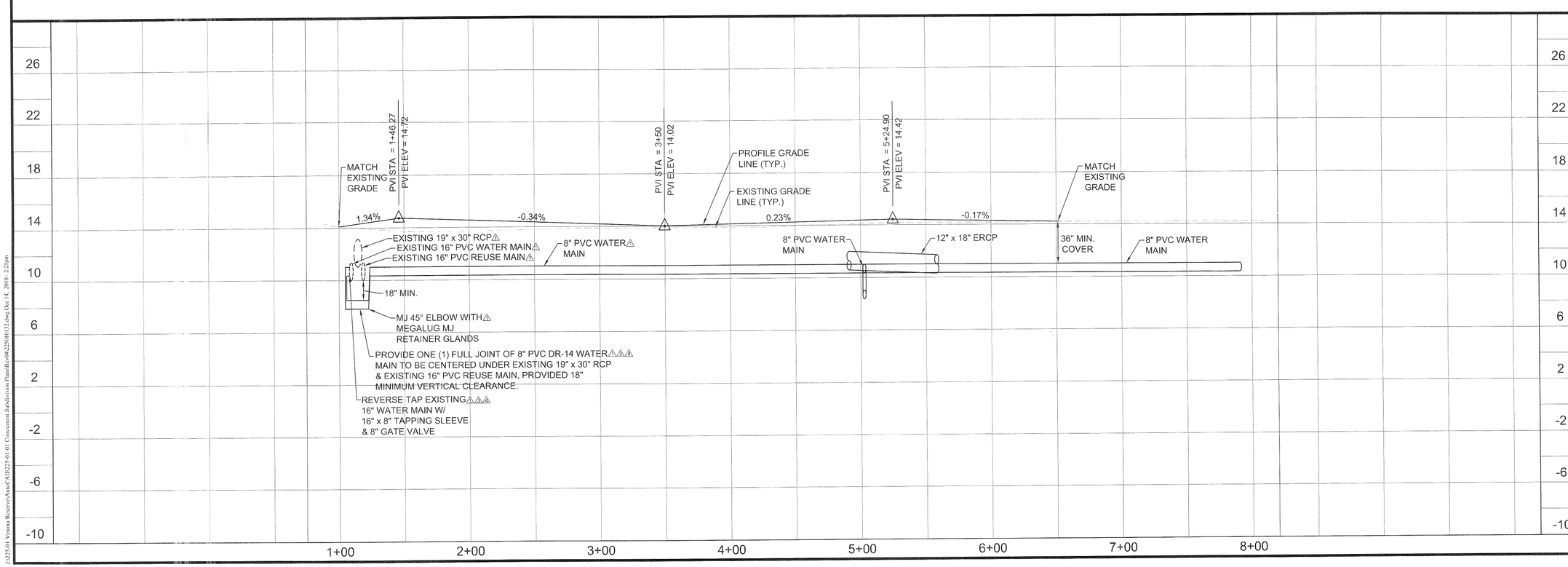

WALDROP ENGINEERING
CIVIL ENGINEERING & LAND DEVELOPMENT CONSULTANTS
29100 BONITA GRANDE DRIVE - SUITE 305 BONITA SPRINGS, FL 34135
P: 239-405-7777 F: 239-405-7899 EMAIL: info@waldropengineering.com

VERONA RESERVE

CLIENT: TAYLOR MORRISON OF FLORIDA, INC.

PLAN AND PROFILE: CLERMONT ROAD
(STA: 1+00 TO END)

PLAN REVISIONS

1	07/28/10	REVISED PER SARASOTA COUNTY COMMENTS
2	09/14/10	REVISED PER SARASOTA COUNTY COMMENTS
3	10/04/10	REVISED PER SARASOTA COUNTY UTILITY COMMENTS
4	11/09/10	REVISED PER SARASOTA COUNTY UTILITY COMMENTS

FLORIDA CERTIFICATE OF AUTHORIZATION #4636

NICHOLAS R. SPIACH, P.E.
FL CERTIFICATE NO. 70207

12/9/10

SET NUMBER: 225-01-01

SHEET: 32

J:\225-01 Verona Reserve\AutoCAD\225-01-01 Concurrent Subdivision Plans\Rev04\225901032.dwg Dec 14, 2010 - 2:21pm

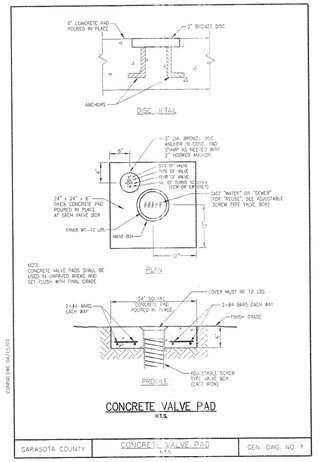

CONCRETE VALVE PAD
N.T.S.

SARASOTA COUNTY	CONCRETE VALVE PAD N.T.S.	GEN. DWG. NO. 1

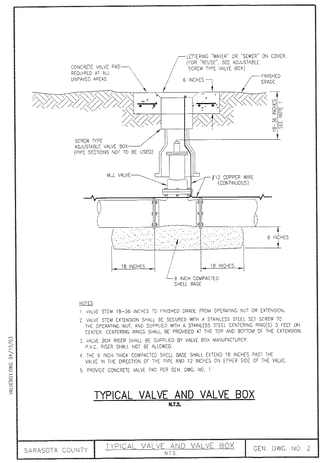

NOTES
1. VALVE STEM 18-36 INCHES TO FINISHED GRADE FROM OPERATING NUT OR EXTENSION.
2. VALVE STEM EXTENSION SHALL BE SECURED WITH A STAINLESS STEEL SET SCREW TO THE OPERATING NUT, AND SUPPLIED WITH A STAINLESS STEEL CENTERING RINGS(3 FEET ON CENTER. CENTERING RINGS SHALL BE PROVIDED AT THE TOP AND BOTTOM OF THE EXTENSION.
3. VALVE BOX RISER SHALL BE SUPPLIED BY VALVE BOX MANUFACTURER. P.V.C. RISER SHALL NOT BE ALLOWED.
4. THE 8 INCH THICK COMPACTED SHELL BASE SHALL EXTEND 18 INCHES PAST THE VALVE IN THE DIRECTION OF THE PIPE AND 12 INCHES ON EITHER SIDE OF THE VALVE.
5. PROVIDE CONCRETE VALVE PAD PER GEN. DWG. NO. 1

TYPICAL VALVE AND VALVE BOX
N.T.S.

SARASOTA COUNTY	TYPICAL VALVE AND VALVE BOX N.T.S.	GEN. DWG. NO. 2

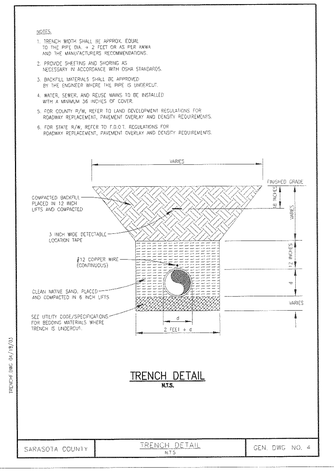

TRENCH DETAIL
N.T.S.

SARASOTA COUNTY	TRENCH DETAIL N.T.S.	GEN. DWG. NO. 4

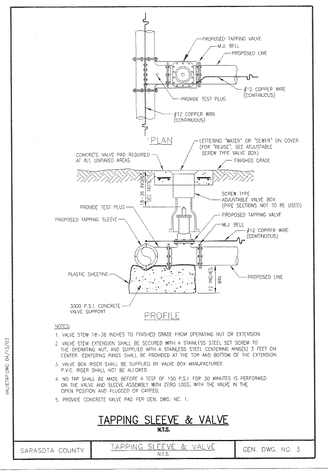

NOTES
1. VALVE STEM 18-36 INCHES TO FINISHED GRADE FROM OPERATING NUT OR EXTENSION.
2. VALVE STEM EXTENSION SHALL BE SECURED WITH A STAINLESS STEEL SET SCREW TO THE OPERATING NUT, AND SUPPLIED WITH A STAINLESS STEEL CENTERING RINGS(3 FEET ON CENTER. CENTERING RINGS SHALL BE PROVIDED AT THE TOP AND BOTTOM OF THE EXTENSION.
3. VALVE BOX RISER SHALL BE SUPPLIED BY VALVE BOX MANUFACTURER. P.V.C. RISER SHALL NOT BE ALLOWED.
4. NO TAP SHALL BE MADE BEFORE A TEST OF 150 P.S.I. FOR 30 MINUTES IS PERFORMED ON THE VALVE AND SLEEVE ASSEMBLY WITH ZERO LOSS, WITH THE VALVE IN THE OPEN POSITION AND FLUSHED OR CAPPED.
5. PROVIDE CONCRETE VALVE PAD PER GEN. DWG. NO. 1.

TAPPING SLEEVE & VALVE
N.T.S.

SARASOTA COUNTY	TAPPING SLEEVE & VALVE N.S.	GEN. DWG. NO. 3

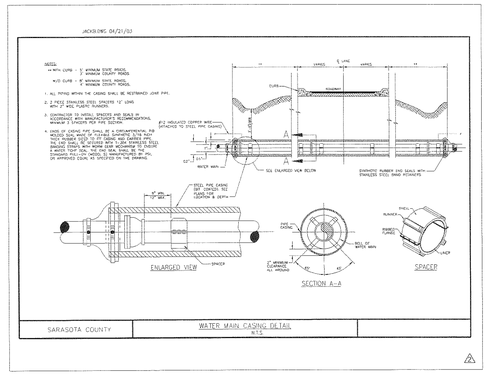

SARASOTA COUNTY	WATER MAIN CASING DETAIL N.T.S.	

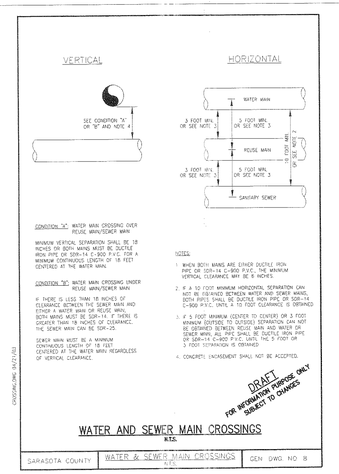

WATER AND SEWER MAIN CROSSINGS
N.T.S.

SARASOTA COUNTY	WATER & SEWER MAIN CROSSINGS N.T.S.	GEN DWG NO 8

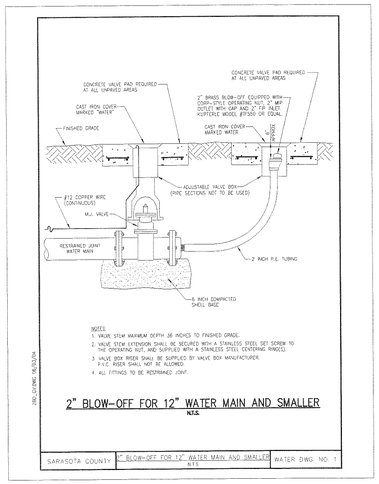

2" BLOW-OFF FOR 12" WATER MAIN AND SMALLER
N.T.S.

SARASOTA COUNTY	2" BLOW-OFF FOR 12" WATER MAIN AND SMALLER N.T.S.	WATER DWG. NO. 1

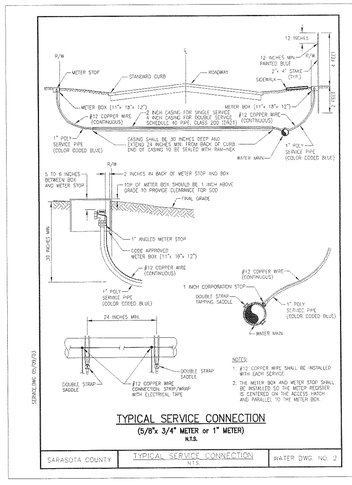

TYPICAL SERVICE CONNECTION
(5/8"x 3/4" METER or 1" METER)
N.T.S.

SARASOTA COUNTY	TYPICAL SERVICE CONNECTION N.T.S.	WATER DWG. NO. 2

TYPICAL WATER NOTES

1.) CONTRACTOR TO VERIFY SIZE AND LOCATION OF EXISTING UTILITIES PRIOR TO COMMENCING CONSTRUCTION. CONTRACTOR SHALL BE LIABLE FOR ANY EXPENSE RESULTING FROM DAMAGE TO EXISTING UTILITIES. ANY CONFLICTS WITH THE UTILITIES SHALL BE BIRDLIGHT TO THE ATTENTION OF THE ENGINEER AS SOON AS POSSIBLE.

2.) WATER UTILITIES SHALL BE CONSTRUCTED IN ACCORDANCE WITH THE SARASOTA BOARD OF COUNTY COMMISSIONERS "UNIFORM WATER, WASTEWATER, AND REUSE SYSTEM CODE," ORDINANCE NO. 99-058.

3.) FITTINGS SHALL BE USED TO MAINTAIN PLAN ALIGNMENT OF ALL MAINS. DEVIATION FROM PLAN ALIGNMENT SHALL NOT BE MORE THAN 75% OF THE MANUFACTURER'S RECOMMENDED MAXIMUM DEFLECTION.

4.) MINIMUM COVER FOR THE WATER MAIN SHALL BE MEASURED FROM FINISHED GRADES. IT IS THE RESPONSIBILITY OF THE CONTRACTOR TO INSURE MINIMUM COVER, REGARDLESS OF GRADE.

5.) ALL POTABLE WATER MAINS SHALL BE SEPARATED FROM SANITARY SEWER, STORM SEWER, AGRICULTURAL, AND IRRIGATION MAINS BY A MINIMUM VERTICAL DISTANCE OF EIGHTEEN (18) INCHES.

6.) ALL POTABLE WATER MAINS SHALL BE OWNED AND MAINTAINED BY SARASOTA COUNTY UTILITIES.

7.) CONTRACTOR SHALL CONSTRUCT ALL WATER APPURTENANCES INCLUDING METER BOXES, BLOW-OFFS, VALVE BOXES, AIR RELEASE VALVES, FIRE HYDRANTS, ETC. TO FINISHED GRADE. CONTRACTOR SHALL COORDINATE DURING THE CONSTRUCTION STAKEOUT AND PRIOR TO CONSTRUCTION OF SAID APPURTENANCES WITH OWNER AND ENGINEER REGARDING FINISHED GRADE. IT IS THE RESPONSIBILITY OF THE CONTRACTOR TO INSURE CONSTRUCTION OF SAID APPURTENANCES TO FINISHED GRADE.

8.) ALL WATER SERVICES UNDER ROADWAYS ARE TO BE SLEEVED.

9.) WATER MAINS SHALL BE AWWA C900 DR-18, CLASS 150 PVC, UNLESS NOTED OTHERWISE. ALL WATER AND IRRIGATION MAINS UNDER PAVEMENT AND AT CONFLICT CROSSINGS SHALL BE AWWA C900 DR-14 PVC PIPE.

10.) THE WATER SERVICES SHALL BE INSTALLED BY CONTRACTOR.

11.) WATER MAINS SHALL BE LOCATED 5' FROM BACK OF CURB (TYPICAL), UNLESS NOTED OTHERWISE.

12.) WATER MAINS SHALL BE ROUTED UNDER EXISTING CULVERTS, STRUCTURES, OR APPURTENANCES OTHER THAN SANITARY SEWER MAINS WHEN NECESSARY TO MAINTAIN MINIMUM COVER, UNLESS OTHERWISE NOTED.

13.) IT WILL BE THE RESPONSIBILITY OF THE CONTRACTOR TO NOTIFY THE COUNTY, UTILITY COMPANIES, AND THE ENGINEER 24 HOURS PRIOR TO ANY WORK AT THE SITE. WATER MAIN TIE-INS REQUIRING WATER SERVICE TO BE SHUT OFF WILL BE MADE DURING TIMES SPECIFIED BY AQUA UTILITIES FLORIDA, INC.

14.) THE CONTRACTOR SHALL COORDINATE HOLDING OF POLE WITH UTILITY COMPANIES IN ADVANCE SO UNNECESSARY DELAYS OF PROJECT WILL NOT BE INCURRED. THE COST FOR THE HOLDING OF THE POWER POLES WILL BE INCLUDED IN THE WATER MAIN UNIT COST ITEMS CONTAINED IN THE PROPOSAL.

15.) ALL VALVES TO BE INSTALLED OUTSIDE OF ALL PAVEMENT AND CURBED AREAS WHERE POSSIBLE.

16.) ALL WATER MAINS SHALL HAVE 3' OF COVER UNLESS OTHERWISE NOTED.

17.) SEE UTILITY DETAIL DRAWINGS FOR WATER SERVICE TERMINATION.

18.) ALL PVC WATER MAINS WILL BE BLUE IN COLOR. MYLAR DETECTABLE COLOR TAPE, THREE INCHES WIDE, WITH WORDS "WATER MAIN" WILL BE PLACED 18 INCHES BELOW FINISHED GROUND AND ABOVE D.I.P. AND PVC WATER MAIN. NO. 12 CONTINUOUS COPPER WIRE SHALL BE LAID ABOVE ALL WATER MAINS. THE COST FOR COLOR TAPE AND COPPER WIRE WILL BE INCLUDED IN THE COST OF THE WATER MAIN UNIT PRICES.

19.) ADJUST SIDEWALK AROUND VALVE PADS.

TYPICAL WATER SYSTEM "RECORD DATA"

1.) THE CONTRACTOR SHALL LOCATE VALVES, SERVICES, FIRE HYDRANTS, AIR RELEASE VALVES, ETC. BY USING A TWO (2) POINT SWING MEASUREMENT FROM PERMANENT PHYSICAL FEATURES THAT CAN READILY BE FOUND ON THE DRAWING AND IN THE FIELD. THESE MEASUREMENTS SHALL BE SHOWN ON THE "RECORD" DRAWINGS BY THE CONTRACTOR AND PRESENTED TO THE ENGINEER.

2.) THE CONTRACTOR SHALL FURNISH "AS-BUILT" TOP OF PIPE ELEVATIONS OF ALL WATER MAINS IN ACCORDANCE WITH SARASOTA COUNTY UTILITIES' REQUIREMENTS.

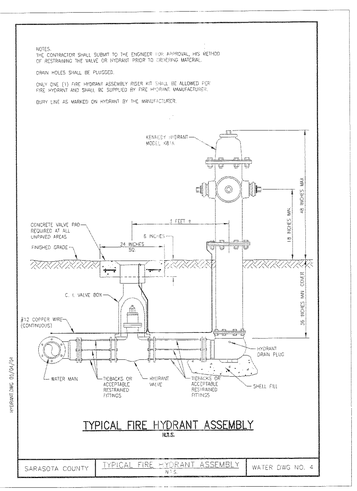

TYPICAL FIRE HYDRANT ASSEMBLY
N.T.S.

SARASOTA COUNTY	TYPICAL FIRE HYDRANT ASSEMBLY N.T.S.	WATER DWG NO. 4

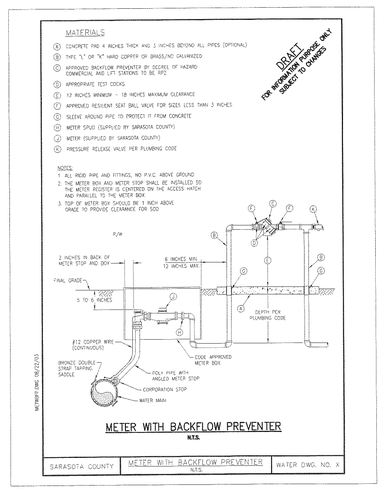

METER WITH BACKFLOW PREVENTER
N.T.S.

SARASOTA COUNTY	METER WITH BACKFLOW PREVENTER N.T.S.	WATER DWG. NO. X

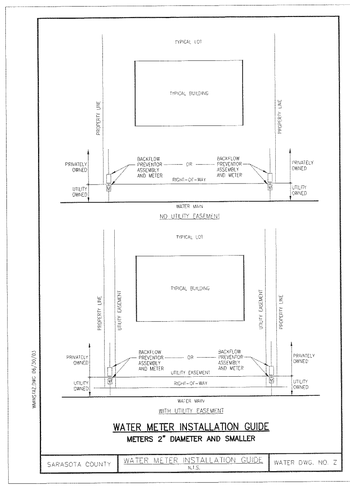

WATER METER INSTALLATION GUIDE
METERS 2" DIAMETER AND SMALLER

SARASOTA COUNTY	WATER METER INSTALLATION GUIDE N.T.S.	WATER DWG. NO. Z

NOMINAL PIPE DIA.	90° BEND	45° BEND	22 1/2° BEND	11 1/4° BEND	REDUCER NOTE 1	IN LINE VALVE OR DEAD END	TEE	
							BRANCH	RUN
4	24	10	5	2	-	65	NOTE 2	RESTRAIN ONE FULL JOINT EITHER SIDE OF TEE
6	33	14	6	3	47	91	NOTE 2	
8	43	18	8	4	86	120	25	
10	52	21	10	5	117	144	47	
12	60	25	12	6	147	170	72	

TABLE NOTES

1.) INDICATES REDUCER SIZE UTILIZING 4" PIPE SIZE FOR SMALL SIZE. LENGTH SHOWN IS FOR LARGER PIPE DIAMETER TO BE RESTRAINED.

2.) RESTRAIN MINIMUM ONE FULL LENGTH OF PIPE ON ALL SIDES OF FITTING REGARDLESS OF LENGTH INDICATED ON TABLES.

3.) LENGTH OF PIPE IS ASSUMED TO BE 18 FT.

4.) CONTRACTOR SHALL BE GUIDED BY THIS TABLE. RESTRAINED JOINT LENGTHS WILL VARY IF THE DESIGN CRITERIA VARIES FROM THAT ASSUMED.

RESTRAINED JOINT PIPE TABLE FOR PVC PIPE

IN LIEU OF CONCRETE POURED THRUST BLOCKING AND / OR WHERE CALLED FOR ON THE CONSTRUCTION DRAWINGS THE CONTRACTOR SHALL USE THE TABLE BELOW TO DETERMINE THE LENGTH OF PIPE IN FEET FROM EACH BEND, REDUCER, VALVE, TEE, DEAD END OR FITTING THAT SHALL BE RESTRAINED.

WATER MAIN OR RECLAIMED WATER MAIN DESIGN CRITERIA

TEST PRESSURE IN PSI ---------- 250
DEPTH OF MAIN IN FEET ---------- 3.0
TRENCH TYPE AND BEDDING ---------- 4
SOIL TYPE ---------- SM
SAFETY FACTOR ---------- 1.5
TYPICAL JOINT LENGTH, IN FEET ---- 18

WALDROP ENGINEERING
CIVIL ENGINEERING & LAND DEVELOPMENT CONSULTANTS
28100 BONITA GRANDE DRIVE - SUITE 305 BONITA SPRINGS, FL 34135
P: 239-405-7777 F: 239-405-7899 EMAIL: info@waldropengineering.com

VERONA RESERVE

CLIENT: TAYLOR MORRISON OF FLORIDA, INC.

WATER DISTRIBUTION DETAILS

PLAN REVISIONS

1	09/14/10	REVISED PER SARASOTA COUNTY COMMENTS
2	10/04/10	REVISED PER SARASOTA COUNTY UTILITY COMMENTS

FLORIDA CERTIFICATE OF AUTHORIZATION #6636

NICHOLAS B. SPEACH, P.E.
FL CERTIFICATE NO. 70207
12/15/10

SET NUMBER: 225-01-01

SHEET : 33

J:\225-01 Verona Reserve\Autoc\AD\225-01-01 Concurrent Subdivision Plan\Rev04\25901013.dwg Dec 14, 2010 - 2:21pm

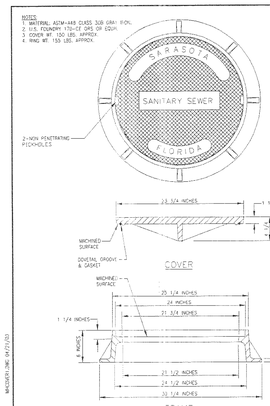

STANDARD MANHOLE RING AND COVER
N.T.S.

SARASOTA COUNTY | STANDARD MANHOLE RING AND COVER N.T.S. | SEWER DWG. NO. 1

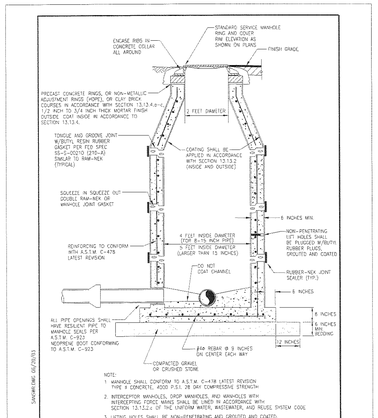

STANDARD WASTEWATER PRE-CAST MANHOLE
N.T.S.

SARASOTA COUNTY | STANDARD WASTEWATER PRE-CAST MANHOLE N.T.S. | SEWER DWG. NO. 2

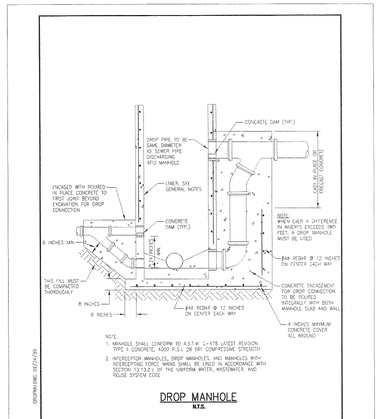

DROP MANHOLE
N.T.S.

SARASOTA COUNTY | DROP MANHOLE N.T.S. | SEWER DWG. NO. 5

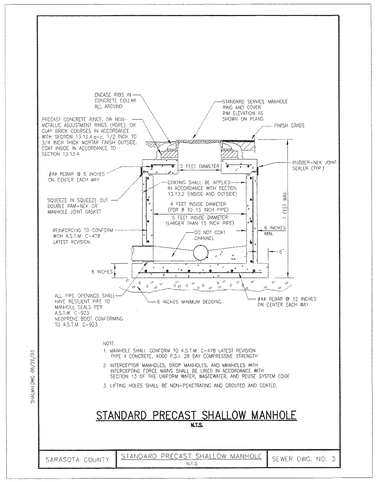

STANDARD PRECAST SHALLOW MANHOLE
N.T.S.

SARASOTA COUNTY | STANDARD PRECAST SHALLOW MANHOLE N.T.S. | SEWER DWG. NO. 3

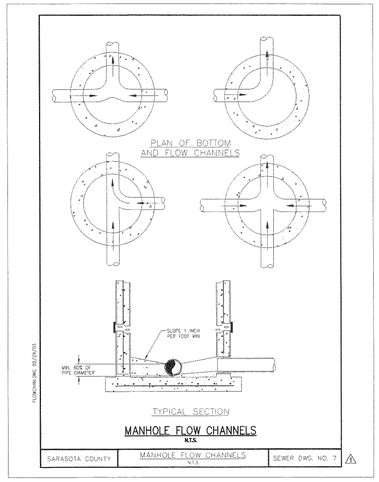

MANHOLE FLOW CHANNELS
N.T.S.

SARASOTA COUNTY | MANHOLE FLOW CHANNELS N.T.S. | SEWER DWG. NO. 7

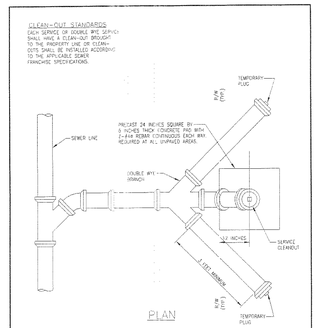

DOUBLE SERVICE SANITARY SEWER
N.T.S.

SARASOTA COUNTY | DOUBLE SERVICE SANITARY SEWER N.T.S. | SEWER DWG. NO. 8

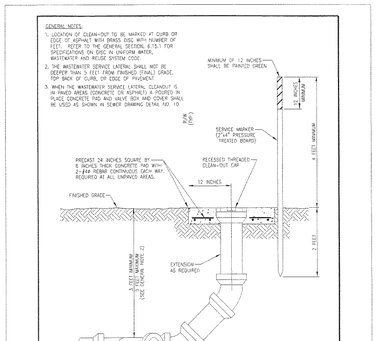

SERVICE CLEAN-OUT
N.T.S.

SARASOTA COUNTY | SERVICE CLEAN-OUT N.T.S. | SEWER DWG. NO. 9

TYPICAL WASTEWATER NOTES

1.) CONTRACTOR TO VERIFY SIZE AND LOCATION OF EXISTING UTILITIES PRIOR TO COMMENCING CONSTRUCTION. CONTRACTOR SHALL BE LIABLE FOR ANY EXPENSE RESULTING FROM DAMAGE TO EXISTING UTILITIES. ANY CONFLICTS WITH THE UTILITIES SHALL BE BROUGHT TO THE ATTENTION OF THE ENGINEER AS SOON AS POSSIBLE.

2.) ALL CONSTRUCTION SHALL MEET THE MINIMUM REQUIREMENTS OF THE SARASOTA COUNTY "UNIFORM WATER, WASTEWATER AND REUSE SYSTEM CODE." ORDINANCE NO. 99-058, AND EXCEED THE REQUIREMENTS OF THIS ORDINANCE WHEN INDICATED ON THE CONSTRUCTION DRAWINGS OR IN THE PROJECT SPECIFICATIONS.

3.) TESTING SHALL BE IN ACCORDANCE WITH THE SARASOTA COUNTY "UNIFORM WATER, WASTEWATER AND REUSE SYSTEM CODE".

4.) THE CONTRACTOR SHALL CONDUCT SEWER PIPE TESTING AS OUTLINED IN THE SARASOTA COUNTY "UNIFORM WATER, WASTEWATER AND REUSE SYSTEM CODE." ALL FAILURES FOUND SHALL BE CORRECTED. GROUT OR GEL REPAIRS ON NEWLY LAID SEWER LINES WILL NOT BE PERMITTED.

5.) WHERE A HOUSE OR OTHER CONNECTION TERMINATES, THE CONTRACTOR SHALL PROVIDE AND INSTALL A 2" X 4" STAKE A MINIMUM OF FOUR FEET ABOVE GROUND TO FLOW LINE OF PIPE. THE TOP TWELVE (12) INCHES ARE TO BE PAINTED GREEN. SEE DETAIL.

6.) CONTRACTOR SHALL PLACE 3" METALLIC BURIAL IDENTIFICATION TAPE WITHIN 18" DIRECTLY ABOVE SEWER LINES.

7.) MANHOLES SHALL COMPLY WITH A.S.T.M. SPECIFICATION C-478, LATEST REVISION, "PRECAST REINFORCED CONCRETE MANHOLE SECTION."

8.) SANITARY SEWER GRAVITY PIPE LENGTHS ARE FROM CENTER TO CENTER OF MANHOLES.

9.) ALL SANITARY SEWER MAINS HALL BE ASTM-D-3034, SDR 26. ALL FORCE MAINS SHALL BE AWWA C900 DR-18, CLASS 150 PVC, UNLESS NOTED OTHERWISE. ALL FORCE MAINS UNDER PAVEMENT AND AT CONFLICT CROSSING SHALL BE AWWA C900 DR-18, CLASS 200 PVC PIPE.

TYPICAL WASTEWATER SYSTEM "RECORD DATA"

1.) THE CONTRACTOR SHALL LOCATE MANHOLES, SERVICES, CLEANOUTS, ETC. BY USING A TWO (2) POINT SWING MEASUREMENTS FROM PERMANENT PHYSICAL FEATURES THAT CAN READILY BE FOUND ON THE DRAWING AND IN THE FIELD. THESE MEASUREMENTS SHALL BE SHOWN ON THE "RECORD" DRAWING BY THE CONTRACTOR AND PRESENTED TO THE ENGINEER.

2.) THE CONTRACTOR SHALL FURNISH "RECORD" STATIONING OF THE SEWER WYES USING EACH DOWNSTREAM MANHOLE AS STATION 0+00.

3.) THE CONTRACTOR SHALL FURNISH "AS-BUILT" TOP OF PIPE ELEVATIONS OF ALL FORCE MAINS IN ACCORDANCE WITH SARASOTA COUNTY UTILITIES.

WALDROP ENGINEERING
CIVIL ENGINEERING & LAND DEVELOPMENT CONSULTANTS
28100 BONITA GRANDE DRIVE - SUITE 305 BONITA SPRINGS, FL 34135
P: 239-405-7777 F: 239-405-7899 EMAIL: info@waldropengineering.com

VERONA RESERVE

CLIENT: TAYLOR MORRISON OF FLORIDA, INC.

WASTEWATER COLLECTION DETAILS

PLAN REVISIONS

1	02/28/10	REVISED PER SARASOTA COUNTY COMMENTS

FLORIDA CERTIFICATE OF AUTHORIZATION #6636

NICHOLAS B. SPRAGUE LICENSED No 70207 STATE OF FLORIDA

NICHOLAS B. SPRAGUE, P.E. 12/15/10
FL CERTIFICATE NO. 70207

SET NUMBER: 225-01-01

SHEET : 34

A:\225-01 Verona Reserve\AutoCAD\225-01-01 Concurrent Subdivision Plan\Revit\225001H34.dwg Dec 14, 2010 - 2:21pm

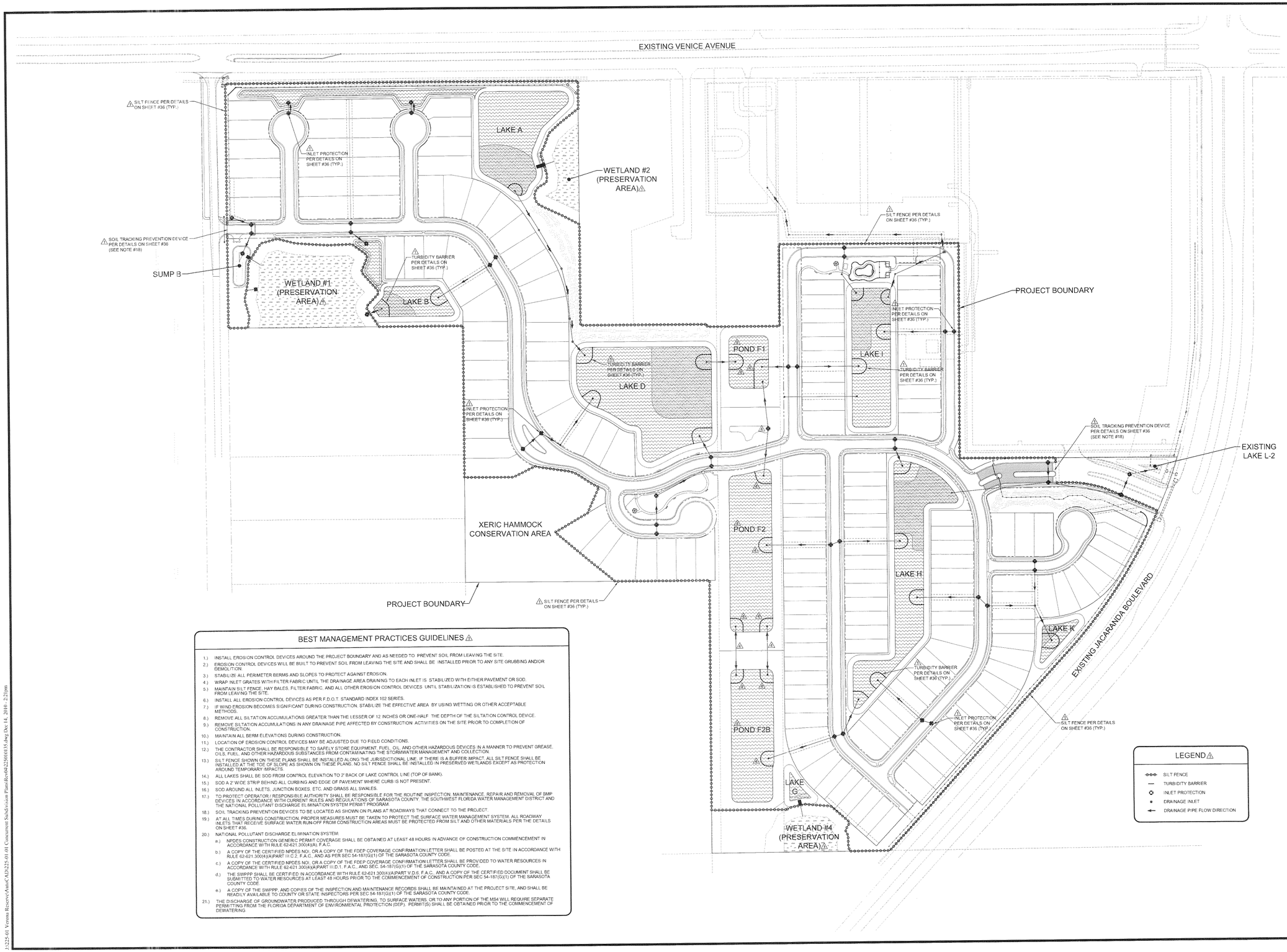

BEST MANAGEMENT PRACTICES GUIDELINES

1.) INSTALL EROSION CONTROL DEVICES AROUND THE PROJECT BOUNDARY AND AS NEEDED TO PREVENT SOIL FROM LEAVING THE SITE.

2.) EROSION CONTROL DEVICES WILL BE BUILT TO PREVENT SOIL FROM LEAVING THE SITE AND SHALL BE INSTALLED PRIOR TO ANY SITE GRUBBING AND/OR DEMOLITION.

3.) STABILIZE ALL PERIMETER BERMS AND SLOPES TO PROTECT AGAINST EROSION.

4.) WRAP INLET GRATES WITH FILTER FABRIC UNTIL THE DRAINAGE AREA DRAINING TO EACH INLET IS STABILIZED WITH EITHER PAVEMENT OR SOD.

5.) MAINTAIN SILT FENCE, HAY BALES, FILTER FABRIC, AND ALL OTHER EROSION CONTROL DEVICES UNTIL STABILIZATION IS ESTABLISHED TO PREVENT SOIL FROM LEAVING THE SITE.

6.) INSTALL ALL EROSION CONTROL DEVICES AS PER F.D.O.T. STANDARD INDEX 102 SERIES.

7.) IF WIND EROSION BECOMES SIGNIFICANT DURING CONSTRUCTION, STABILIZE THE EFFECTIVE AREA BY USING WETTING OR OTHER ACCEPTABLE METHODS.

8.) REMOVE ALL SILTATION ACCUMULATIONS GREATER THAN THE LESSER OF 12 INCHES OR ONE-HALF THE DEPTH OF THE SILTATION CONTROL DEVICE.

9.) REMOVE SILTATION ACCUMULATIONS IN ANY DRAINAGE PIPE AFFECTED BY CONSTRUCTION ACTIVITIES ON THE SITE PRIOR TO COMPLETION OF CONSTRUCTION.

10.) MAINTAIN ALL BERM ELEVATIONS DURING CONSTRUCTION.

11.) LOCATION OF EROSION CONTROL DEVICES MAY BE ADJUSTED DUE TO FIELD CONDITIONS.

12.) THE CONTRACTOR SHALL BE RESPONSIBLE TO SAFELY STORE EQUIPMENT, FUEL, OIL, AND OTHER HAZARDOUS DEVICES IN A MANNER TO PREVENT GREASE, OILS, FUEL, AND OTHER HAZARDOUS SUBSTANCES FROM CONTAMINATING THE STORMWATER MANAGEMENT AND COLLECTION.

13.) SILT FENCE SHOWN ON THESE PLANS SHALL BE INSTALLED ALONG THE JURISDICTIONAL LINE. IF THERE IS A BUFFER IMPACT, ALL SILT FENCE SHALL BE INSTALLED AT THE TOE OF SLOPE AS SHOWN ON THESE PLANS. NO SILT FENCE SHALL BE INSTALLED IN PRESERVED WETLANDS EXCEPT AS PROTECTION AROUND TEMPORARY IMPACTS.

14.) ALL LAKES SHALL BE SOD FROM CONTROL ELEVATION TO 2' BACK OF LAKE CONTROL LINE (TOP OF BANK).

15.) SOD A 2' WIDE STRIP BEHIND ALL CURBING AND EDGE OF PAVEMENT WHERE CURB IS NOT PRESENT.

16.) SOD AROUND ALL INLETS, JUNCTION BOXES, ETC. AND GRASS ALL SWALES.

17.) TO PROTECT OPERATOR / RESPONSIBLE AUTHORITY SHALL BE RESPONSIBLE FOR THE ROUTINE INSPECTION, MAINTENANCE, REPAIR AND REMOVAL OF BMP DEVICES IN ACCORDANCE WITH CURRENT RULES AND REGULATIONS OF SARASOTA COUNTY, THE SOUTHWEST FLORIDA WATER MANAGEMENT DISTRICT AND THE NATIONAL POLLUTANT DISCHARGE ELIMINATION SYSTEM PERMIT PROGRAM.

18.) SOIL TRACKING PREVENTION DEVICES TO BE LOCATED AS SHOWN ON PLANS AT ROADWAYS THAT CONNECT TO THE PROJECT.

19.) AT ALL TIMES DURING CONSTRUCTION, PROPER MEASURES MUST BE TAKEN TO PROTECT THE SURFACE WATER MANAGEMENT SYSTEM. ALL ROADWAY INLETS THAT RECEIVE SURFACE WATER RUN-OFF FROM CONSTRUCTION AREAS MUST BE PROTECTED FROM SILT AND OTHER MATERIALS PER THE DETAILS ON SHEET #36.

20.) NATIONAL POLLUTANT DISCHARGE ELIMINATION SYSTEM:

a.) NPDES CONSTRUCTION GENERIC PERMIT COVERAGE SHALL BE OBTAINED AT LEAST 48 HOURS IN ADVANCE OF CONSTRUCTION COMMENCEMENT IN ACCORDANCE WITH RULE 62-621.300(4)(A), F.A.C.

b.) A COPY OF THE CERTIFIED NPDES NOI, OR A COPY OF THE FDEP COVERAGE CONFIRMATION LETTER SHALL BE POSTED AT THE SITE IN ACCORDANCE WITH RULE 62-621.300(4)(A)PART III.C.2, F.A.C., AND AS PER SEC 54-187(G)(1) OF THE SARASOTA COUNTY CODE.

c.) A COPY OF THE CERTIFIED NPDES NOI, OR A COPY OF THE FDEP COVERAGE CONFIRMATION LETTER SHALL BE PROVIDED TO WATER RESOURCES IN ACCORDANCE WITH RULE 62-621.300(4)(A)PART III.D.1, F.A.C., AND SEC. 54-187(G)(1) OF THE SARASOTA COUNTY CODE.

d.) THE SWPPP SHALL BE CERTIFIED IN ACCORDANCE WITH RULE 62-621.300(4)(A)PART V.D.6, F.A.C., AND A COPY OF THE CERTIFIED DOCUMENT SHALL BE SUBMITTED TO WATER RESOURCES AT LEAST 48 HOURS PRIOR TO THE COMMENCEMENT OF CONSTRUCTION PER SEC 54-187(G)(1) OF THE SARASOTA COUNTY CODE.

e.) A COPY OF THE SWPPP, AND COPIES OF THE INSPECTION AND MAINTENANCE RECORDS SHALL BE MAINTAINED AT THE PROJECT SITE, AND SHALL BE READILY AVAILABLE TO COUNTY OR STATE INSPECTORS PER SEC 54-187(G)(1) OF THE SARASOTA COUNTY CODE.

21.) THE DISCHARGE OF GROUNDWATER PRODUCED THROUGH DEWATERING, TO SURFACE WATERS, OR TO ANY PORTION OF THE MS4 WILL REQUIRE SEPARATE PERMITTING FROM THE FLORIDA DEPARTMENT OF ENVIRONMENTAL PROTECTION (DEP). PERMIT(S) SHALL BE OBTAINED PRIOR TO THE COMMENCEMENT OF DEWATERING.

WALDROP ENGINEERING
CIVIL ENGINEERING & LAND DEVELOPMENT CONSULTANTS
28100 BONITA GRANDE DRIVE - SUITE 305 BONITA SPRINGS, FL 34135
P: 239-405-7777 F: 239-405-7899 EMAIL: info@waldropengineering.com

VERONA RESERVE

CLIENT: TAYLOR MORRISON OF FLORIDA, INC.

BEST MANAGEMENT PRACTICES PLAN

PLAN REVISIONS

2	07/26/10	REVISED PER SARASOTA COUNTY COMMENTS
1	12/14/10	REVISED PER CLIENT COMMENTS

FLORIDA CERTIFICATE OF AUTHORIZATION #8636

NICHOLAS E. SPEACE P.E.
FL CERTIFICATE NO. 70207
12/15/10

SET NUMBER: 225-01-01

SHEET : 35

J:\225-01 Verona Reserve\AutoCAD\225-01-01 Concurrent Subdivision Plans\Rev04\25001035.dwg Dec 14, 2010 - 2:21pm

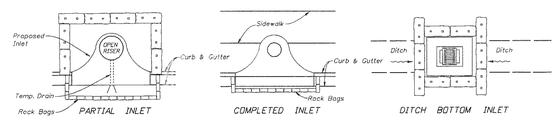

PROTECTION AROUND INLETS OR SIMILAR STRUCTURES

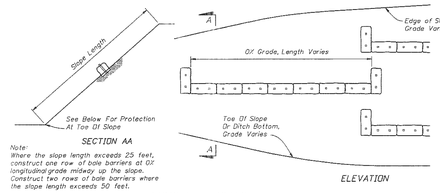

Note:
Where the slope length exceeds 25 feet, construct one row of bale barriers at 0% longitudinal grade midway up the slope. Construct two rows of bale barriers where the slope length exceeds 50 feet.

ALONG FILL SLOPE

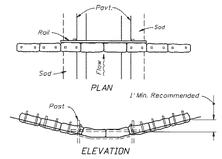

SYNTHETIC BALES OR BALE TYPE BARRIERS FOR PAVED DITCHES

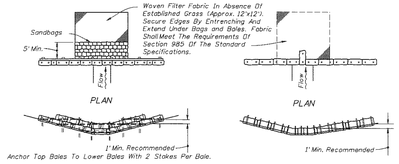

SYNTHETIC BALES OR BALE TYPE BARRIERS FOR UNPAVED DITCHES

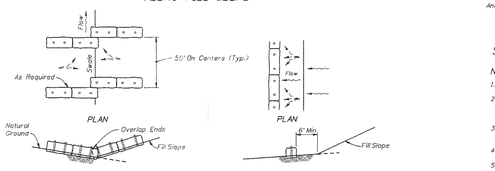

AT TOE OF SLOPE
BARRIERS FOR FILL SLOPES

NOTES FOR SYNTHETIC BALES OR BALE TYPE BARRIERS

1. Type I and II Synthetic Barrier should be spaced in accordance with Chart 1, Sheet 1.
2. Bales shall be trenched 3" to 4" and anchored with 2-1" x 2" for 1" dia.) x 4' wood stakes. Stakes of other material or shape providing equivalent strength may be used if approved by the Engineer. Stakes other than wood shall be removed upon completion of the project.
3. Rails and posts shall be 2" x 4" wood. Other materials providing equivalent strength may be used if approved by the Engineer.
4. Adjacent bales shall be butted firmly together.
5. Where used in conjunction with silt fence, bales shall be placed on the upstream side of the fence.
6. Bales to be paid for under the contract unit price for Synthetic Bales, LF. The unit price shall include the cost of filter fabric for Type I and II Barriers. Sandbags shall be paid for under the unit price for Sandbagging, CY. Rock bags to be paid for under the contract unit price for Rock Bags, EA.

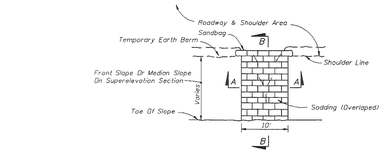

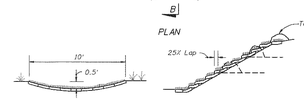

SOD FLUME (SODDING OVERLAPPED)

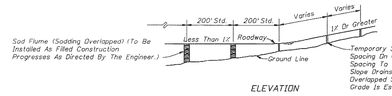

SLOPE DRAIN APPLICATION

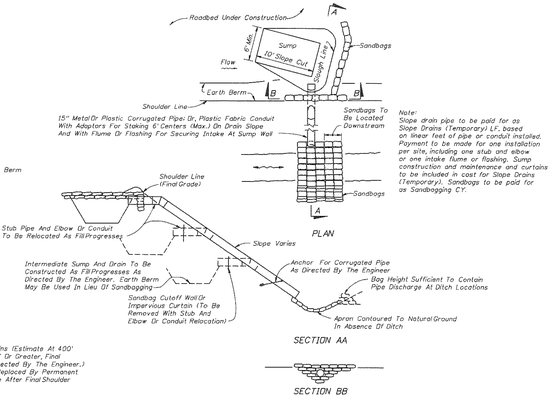

Note:
Slope drain pipe to be paid for as Slope Drains (Temporary) LF, based on linear feet of pipe or conduit installed. Payment to be made for one installation per site, including one stub and elbow or one intake flume or flashing. Sump construction and maintenance and curtains to be included in cost for Slope Drains (Temporary). Sandbags to be paid for as Sandbagging CY.

TEMPORARY SLOPE DRAIN

TEMPORARY SLOPE DRAIN AND SOD FLUME

(REF. FDOT INDEX 100) N.T.S.

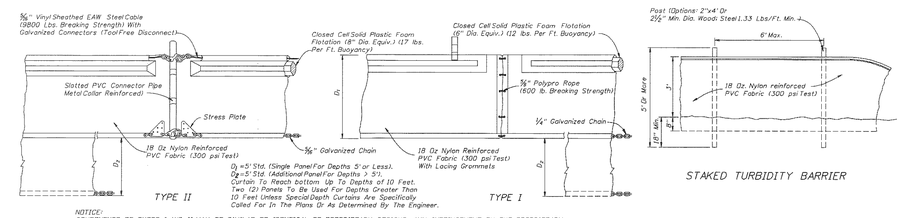

NOTICE:
COMPONENTS OF TYPES I AND II MAY BE SIMILAR OR IDENTICAL TO PROPRIETARY DESIGNS. ANY INFRINGEMENT ON THE PROPRIETARY RIGHTS OF THE DESIGNER SHALL BE THE SOLE RESPONSIBILITY OF THE USER. SUBSTITUTIONS FOR TYPES I AND II SHALL BE AS APPROVED BY THE ENGINEER.

FLOATING TURBIDITY BARRIERS

STAKED TURBIDITY BARRIER

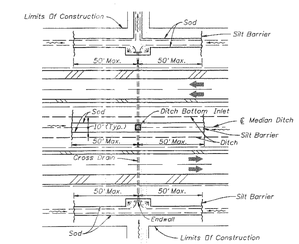

DITCH INSTALLATIONS AT DRAINAGE STRUCTURES

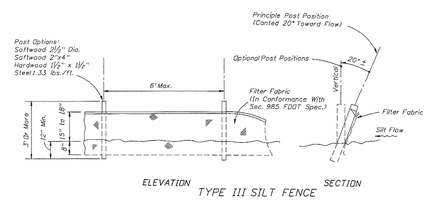

TYPE III SILT FENCE

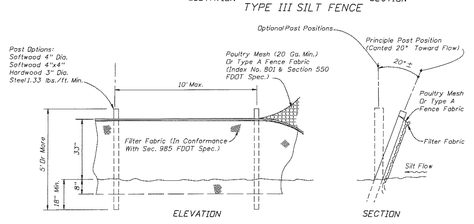

TYPE IV SILT FENCE

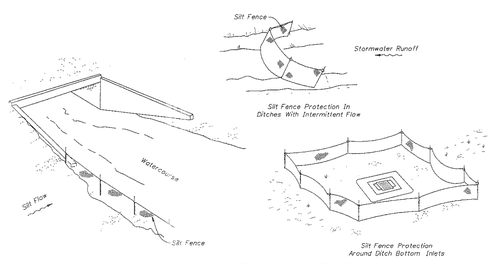

SILT FENCE APPLICATIONS

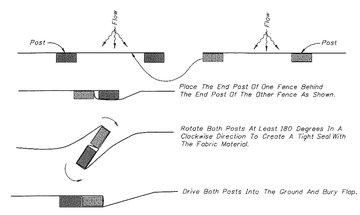

PLAN VIEW
JOINING TWO SILT FENCES

NOTES FOR SILT FENCES

1. Type III Silt Fence to be used at most locations. Where used in ditches, the spacing for Type III Silt fence shall be in accordance with Chart 1, Sheet 1.
2. Type IV Silt Fence to be used where large sediment loads are anticipated. Suggested use is where fill slope is 1:2 or steeper and length of slope exceeds 25 feet. Avoid use where the detained water may back into travelanes or off the right of way.
3. Do not construct silt fences across permanent flowing watercourses. Silt fences are to be at upland locations and turbidity barriers used at permanent bodies of water.
4. Where used as slope protection, Silt Fence is to be constructed on 0% longitudinal grade to avoid channelizing runoff along the length of the fence.
5. Silt Fence to be paid for under the contract unit price for Staked Silt Fence, (LF).

TEMPORARY EROSION AND SEDIMENT CONTROL

(REF. FDOT INDEX 102) N.T.S.

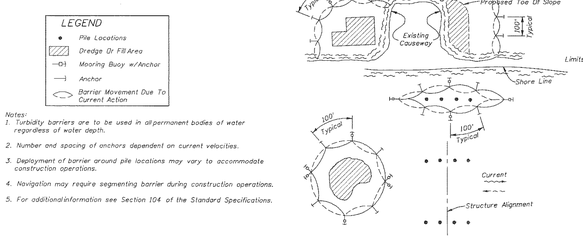

Notes:
1. Turbidity barriers are to be used in all permanent bodies of water regardless of water depth.
2. Number and spacing of anchors dependent on current velocities.
3. Deployment of barrier around pile locations may vary to accommodate construction operations.
4. Navigation may require segmenting barrier during construction operations.
5. For additional information see Section 104 of the Standard Specifications.

TURBIDITY BARRIER APPLICATIONS

TURBIDITY BARRIERS

(REF. FDOT INDEX 103) N.T.S.

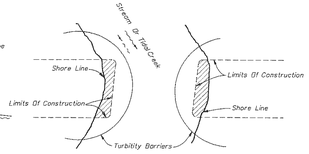

Note:
Turbidity barriers for flowing streams and tidal creeks may be either floating, or staked types or any combinations of types that will suit site conditions and meet erosion control and water quality requirements. The barrier type(s) will be at the Contractor's option unless otherwise specified in the plans, however payment will be under the pay item(s) established in the plans for Floating Turbidity Barrier and/or Staked Turbidity Barrier. Posts in staked turbidity barriers to be installed in vertical position unless otherwise directed by the Engineer.

GENERAL NOTES

1. Floating turbidity barriers are to be paid for under the contract unit price for Floating Turbidity Barrier, LF.
2. Staked turbidity barriers are to be paid for under the contract unit price for Staked Turbidity Barrier, LF.

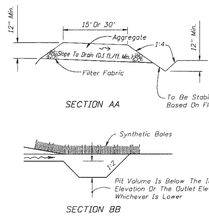

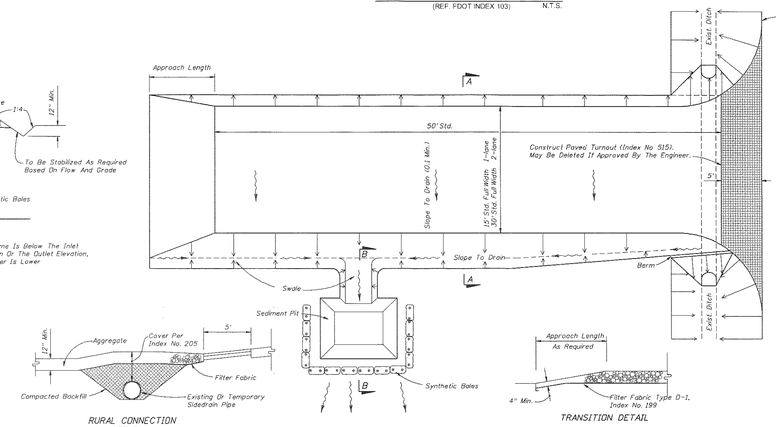

GENERAL NOTES

1. A Soil Tracking Prevention Device (STPD) shall be constructed at locations designated by the engineer for points of egress from unstabilized areas of the project to public roads where off-site tracking of mud could occur. Traffic from unstabilized areas of the construction project shall be directed thru a STPD. Barriers, flagging, or other positive means shall be used as required to limit and direct vehicular egress across the STPD.
2. The Contractor may propose an alternative technique to minimize off-site tracking of sediment. The alternative must be reviewed and approved by the Engineer prior to its use.
3. All materials spilled, dropped, or tracked onto public roads (including the STPD aggregate and construction mud) shall be removed daily, or more frequently if as directed by the Engineer.
4. Aggregates shall be as described in Section 901 excluding 901-2.3. Aggregates shall be FDOT size #1. If this size is not available, the next available smaller size aggregate may be substituted with the approval of the Engineer. Sizes containing excessive small aggregate will track off the project and are unsuitable.
5. The sediment pit should provide a retention volume of 3600 cubic feet/acre of surface area draining to the pit. When the STPD is located from other drainage areas, the following pit volumes will satisfy this requirement: 15' x 50'=(0 ft.) - 30' x 50'=200 ft.) As an option to the sediment pit, the width of the swale bottom can be increased to double the standard. When the sediment pit or swale volume has increased to one half, it shall be cleaned out. When a swale is used, synthetic bales or silt fence shall be placed along the entire length.
6. The swale ditch draining the STPD shall have a 0.02' minimum and a 1.0' maximum grade along the STPD and to the sediment pit.
7. Mitered end sections are not required when the sidedrain pipe satisfies the clear zone requirements.
8. The STPD shall be maintained in a condition that will allow it to perform its function. To prevent off-site tracking, the STPD shall be rinsed daily when in use/to move accumulated mud downward thru the stone. Additional stabilization of the vehicular route leading to the STPD may be required to limit the mud tracked.
9. A STPD shall be paid for under the contract unit price for Soil Tracking Prevention Device, EA. The unit price shall include all labor, equipment and materials, including, but not limited to, mobilization, grading, temporary pipe (including MES when required), filter fabric, aggregate, paved turnout (including asphalt and base construction), ditch stabilization, approach route stabilization, sediment removal and disposal, water, rinsing and cleaning of the STPD and cleaning of public roads, grassing and sod. Synthetic Bale or Bale Type Barrier shall be paid for under the contract unit price for Synthetic Bales, LF. Silt fence shall be paid for under the contract unit price for Staked Silt Fence, LF.
10. The nomenclature of a standard STPD is 15' x 50' unless otherwise shown in the plans. If the volume of entering and exiting vehicles warrant, a 30' width STPD may be used if approved by the Engineer. When a double width (30') STPD is used, the pay quantity shall be 2 for each location.

SOIL TRACKING PREVENTION DEVICE - TYPE A

(REF. FDOT INDEX 106) N.T.S.

WALDROP ENGINEERING
CIVIL ENGINEERING & LAND DEVELOPMENT CONSULTANTS
28100 BONITA GRANDE DRIVE - SUITE 305 BONITA SPRINGS, FL 34135
P: 239-405-7777 F: 239-405-7899 EMAIL: info@waldropengineering.com

VERONA RESERVE

CLIENT: TAYLOR MORRISON OF FLORIDA, INC.

BEST MANAGEMENT PRACTICES DETAILS

PLAN REVISIONS

FLORIDA CERTIFICATE OF AUTHORIZATION #6676

NICHOLAS B. SPENCE LICENSE No 70207 STATE OF FLORIDA

NICHOLAS B. SPENCE, P.E.
FL CERTIFICATION 70207

12/5/10

SET NUMBER: 225-01-01

SHEET: 36

J:\225-01 Verona Reserve\Arist\CAD\225-01-01 Concurrent Subdivision Plans\Recd\4\2250101 Sit.dwg Dec 14, 2010 - 2:21pm

COUNTY OF SARASOTA, FLORIDA

Board of County Commissioners
Sarasota County Planning and Development Services Business Center

Date: February 28, 2008

MEMORANDUM TO:

Nancy Cason
Syprett, Meshad, Resnick & Lieb
1900 Ringling Boulevard
Sarasota, FL 34236

Community Services, Parks & Recreation (Bill Wisniewski)
Emergency Services, Fire Department (Rick Fulwider)
Environmental Services, Utilities (Mike Mylett)
Environmental Services, Water Resources (Joe Kraus)
Health/Human Services (Rich Cantin)
History Center (Dan Hughes)
Planning & Development Services, Code Enforcement (Jim LeGay)
Planning & Development Services, Teri Owen
Planning & Development Services, Land Dev. (Raz Alexe)
Planning & Development Services, Landscape (Martha Horton)
Planning & Development Services (Steve Brown)
Planning & Development Services, Res. Protection (Todd Hershfeld)
Planning & Development Services, Zoning (Brad Bailey)
Planning & Development Services, Zoning (Donna Thompson)
Property Appraiser (Jim Todora)
Public Works, Watershed (Candace Hendrickson)
Public Works, Transportation (Kim Stafford)
School Board (Micki Ryan)
SCAT (Elise Cohen)

SUBJECT: RZ 07-38 **PLANNER: Timothy Lampkin**

ORDINANCE NO.: 2008-014 **PID#: 0414-07-0001; 0414-07-0002; 0414-07-0004; 0414-08-0002; 0414-08-0004; 0414-09-0001; 0414-10-0004; 0414-08-0001**

ACTION TAKEN ON ABOVE SUBJECT IS AS FOLLOWS:
On the 22nd day of January, 2008, the Sarasota County Board of County Commissioners APPROVED Rezone Petition No. 07-38 to rezone 80 acres ±, located on the southwest and southeast corner of East Venice Avenue and Jacaranda Boulevard, Sarasota County, Florida, from District CSC/CG/RMF-1 (Commercial Shopping Center, Commercial General, Residential, Multifamily, 6 units/acre) with stipulations to District CSC/CG/RMF-1 (Commercial Shopping Center, Commercial General, Residential, Multifamily, 6 units/acre) with amended stipulations.

A copy of **Ordinance** No. **2008-014** is attached for your information.

RECEIVED FEB 05 2008 BY:

FILED 2008 JAN 28 PM 2:00 DEPARTMENT OF STATE TALLAHASSEE, FLORIDA

ORDINANCE NO. 2008 - 014

AN ORDINANCE OF THE COUNTY OF SARASOTA, FLORIDA, AMENDING THE OFFICIAL ZONING ATLAS, AS PART OF SARASOTA COUNTY ORDINANCE NO. 2003-052, CODIFIED IN APPENDIX A TO THE SARASOTA COUNTY CODE, RELATING TO ZONING WITHIN THE UNINCORPORATED AREA OF SARASOTA COUNTY; PROVIDING FINDINGS; PROVIDING FOR AMENDMENT OF THE ZONING ATLAS; PROVIDING RESTRICTIONS, STIPULATIONS AND SAFEGUARDS; AND PROVIDING AN EFFECTIVE DATE.

BE IT ORDAINED BY THE BOARD OF COUNTY COMMISSIONERS OF SARASOTA COUNTY, FLORIDA:

Section 1. Findings. The Board of County Commissioners, hereinafter referred to as the "Board," hereby makes the following findings:

A. The Board has received and considered the report of the Sarasota County Planning Commission concerning Rezone Petition No. 07-38, requesting rezoning of the property described herein.

B. The Board has held a public hearing on the proposed rezoning of the property described herein in accordance with the requirements of Sarasota County Ordinance No. 2003-052, codified in Appendix A of the Sarasota County Code (hereinafter "the Zoning Ordinance"), and has considered the information received at said public hearing.

C. The rezoning herein granted is consistent with the Sarasota County Comprehensive Plan and meets the requirements of the Zoning Ordinance.

D. Pursuant to the provisions of Article VII of Chapter 94 of the Sarasota County Code, an evaluation has been completed of the impacts that the proposed rezoning of the property described herein will have on the levels of service for parks, drainage, solid waste, roads, mass transit and water and sewer systems. With the exception of the provisions of Section 3 of this Ordinance, adequate levels of service are anticipated to be available.

Section 2. Amendment of the Zoning Ordinance. The Official Zoning Atlas, adopted under Article 4 of the Zoning Ordinance, is hereby amended by changing the zoning district classification from District CSC/CG/RMF-1 (Commercial Shopping Center, Commercial General, Residential, Multifamily, 6 units/acre) with stipulations to District CSC/CG/RMF-1 (Commercial Shopping Center, Commercial General, Residential, Multifamily, 6 units/acre) with amended stipulations for the following described property located in Sarasota County, Florida:

The legal description of said property in Sarasota County, Florida, being in the southwest and southeast corner of East Venice Avenue and Jacaranda Boulevard and being more particularly described as follows:

RMF-1 WITH STIPULATIONS TO RMF-1 WITH AMENDED STIPULATIONS

COMMENCE AT THE SOUTHEAST CORNER OF SECTION 10, TOWNSHIP 39 SOUTH, RANGE 19 EAST, SARASOTA COUNTY, FLORIDA; THENCE N.89°45'49"W., ALONG THE SOUTH LINE OF SAID SECTION 10 TO THE WESTERLY RIGHT-OF-WAY OF JACARANDA BOULEVARD AS RECORDED IN ROAD PLAT BOOK 3, PAGE 27, OF THE PUBLIC RECORDS OF SARASOTA COUNTY. FLORIDA, A DISTANCE OF 840.73 FEET FOR A POINT OF BEGINNING; THENCE CONTINUE ALONG SAID SOUTH LINE, SAME BEING THE CENTER LINE OF VACATED BREVARD ROAD PER OFFICIAL RECORDS BOOK 1543, PAGE 372, PUBLIC RECORDS OF SARASOTA COUNTY. FLORIDA; THENCE N.89°45'49"W ALONG SAID SOUTH LINE OF VACATED BREVARD ROAD, A DISTANCE OF 479.97 FEET TO THE INTERSECTION OF THE CENTERLINE OF VACATED DELRAY ROAD PER OFFICIAL RECORDS BOOK 1543, PAGE 372, PUBLIC RECORDS OF SARASOTA COUNTY, FLORIDA; THENCE N.0038'16"E. ALONG SAID CENTER LINE OF DELRAY ROAD, A DISTANCE OF 731.57 FEET TO A POINT ON THE EXTENSION OF THE SOUTH LINE OF TRACT 42 VENICE FARMS PER OFFICIAL PLAT BOOK 2, PAGE 179, PUBLIC RECORDS OF SARASOTA COUNTY, FLORIDA; THENCE N.89°20'42"W., ALONG SAID SOUTH LINE AND THE EXTENSION THEREOF, A DISTANCE OF 657.76 FEET TO THE WEST LINE OF SAID TRACT 42; THENCE N.00°33'10"E., ALONG THE WEST LINE OF TRACTS 42 & 43 OF SAID PLAT OF VENICE FARMS. A DISTANCE OF 688.90 FEET TO THE NORTHWEST CORNER OF SAID TRACT 43; THENCE N.89°22 '50"W., ALONG THE SOUTH LINE OF TRACT 44 OF SAID PLAT OF VENICE FARMS, A DISTANCE OF 316.50 FEET TO THE WEST LINE OF SAID TRACT 44; THENCE N.00°27'17"E.. ALONG THE WEST LINE OF SAID TRACT 44, A DISTANCE OF 659.38 FEET TO THE SOUTH RIGHT- OF-WAY LINE OF EAST VENICE AVENUE PER ORDER OF TAKING IN OFFICIAL RECORDS BOOK 1835, PAGE 1475, PUBLIC RECORDS OF SARASOTA COUNTY, FLORIDA; THENCE S.89°21'47"E ., ALONG SAID SOUTH RIGHT-OF-WAY LINE, A DISTANCE OF 634.01 FEET TO A POINT ON THE WEST LINE OF TRACT 46 OF SAID PLAT OF VENICE FARMS; THENCE S.00°31'08"W., ALONG ME WEST LINE OF SAID TRACT 46, A DISTANCE OF 659.19 FEET TO THE SOUTH LINE OF SAID TRACT 46; THENCE S.89°22' 50'E., ALONG SAID SOUTH LINE AND THE EXTENSION THEREOF, A DISTANCE OF 341.24 FEET TO THE CENTER LINE OF SAID VACATED DELRAY ROAD PER MONUMENTATION; THENCE S. 00°23'34"E., ALONG SAID CENTER LINE, A DISTANCE OF 6.71 FEET TO THE SOUTHWEST CORNER OF LANDS DESCRIBED IN OFFICIAL RECORDS BOOK

1833, PAGE 1331, PUBLIC RECORDS OF SARASOTA COUNTY, FLORIDA; THENCE S.89°27'07"E, ALONG THE SOUTH LINE OF SAID LANDS DESCRIBED IN OFFICIAL RECORDS BOOK 1833, PAGE 1331, A DISTANCE OF 194.86 FEET TO THE SOUTHEAST CORNER OF SAID LANDS DESCRIBED IN OFFICIAL RECORDS BOOK 1833, PAGE 1331; THENCE N.00°38'02"E., ALONG THE EAST LINE OF LANDS DESCRIBED IN OFFICIAL RECORDS BOOK 1833, PAGE 1331, A DISTANCE OF 220.31 FEET; THENCE S.89°2'23"E., A DISTANCE OF 484.41 FEET; THENCE S. 00°47'08"W., A DISTANCE OF 576.77 FEET; THENCE S.89°12'52"E. TO A POINT ON THE SAID WESTERLY RIGHT-OF-WAY OF JACARANDA BOULEVARD, A DISTANCE OF 586.90 FEET SAID POINT BEING ON A CURVE TO THE RIGHT WHICH THE RADIUS LIES N.72°24'42"W., SAID CURVE HAVING A RADIUS OF 1357.39 FEET, A CENTRAL ANGLE OF 25°29'45", A CHORD BEARING OF S.30°20'11"W. AND A CHORD LENGTH OF 599.05 FEET: THENCE ALONG SAID WESTERLY RIGHT-OF-WAY OF JACARANDA BOULEVARD ALONG THE ARC OF SAID CURVE, A ARC LENGTH OF 604.02 FEET; THENCE CONTINUING ALONG SAID WESTERLY RIGHT-OF-WAY OF JACARANDA BOULEVARD S.43°05'08"W., A DISTANCE OF 721.96 FEET TO THE POINT OF BEGINNING.ALSO TOGETHER WITH THE FOLLOWING DESCRIBED PARCEL. BEGIN AT THE NORTHEAST CORNER OF LANDS DESCRIBED IN OFFICIAL RECORDS BOOK 1833, PAGE 1331, OF THE PUBLIC RECORDS OF SARASOTA COUNTY, FLORIDA; THENCE N.89°25'23"W. ALONG THE NORTH LINE OF SAID LANDS DESCRIBED IN OFFICIAL RECORDS BOOK 1833, PAGE 1331, AND ITS WESTERLY EXTENSION, A DISTANCE OF 194.97 FEET TO THE CENTER LINE OF VACATED DELRAY ROAD PER OFFICIAL RECORDS BOOK 1543. PAGE 372 OF THE PUBLIC RECORDS OF SARASOTA COUNTY, FLORIDA; THENCE N.00°32 '08"E. ALONG SAID CENT ER LIFE OF VACATED DELRAY ROAD, A DISTANCE OF 369.73 FEET TO A POINT ON THE SOUTH RIGHT- OF-WAY LINE OF EAST VENICE AVENUE PER ORDER OF TAKING IN OFFICIAL RECORDS BOOK 1835, PAGE 1475, OF THE PUBLIC RECORDS OF SARASOTA COUNTY FLORIDA; THENCE S.89°21'23"E. ALONG SAID SOUTH RIGHT-OF-WAY LINE A DISTANCE OF 195.60 FEET; THENCE S.00°38'02"W. TO THE SAID NORTHEAST CORNER OF LANDS DESCRIBED IN OFFICIAL RECORDS BOOK 1833, PAGE 1331, A DISTANCE OF 369.50 FEET TO THE POINT OF BEGINNING.

RMF-2 WITH STIPULATIONS TO RMF-1 WI H AMENDED STIPULATIONS STARTING AT THE SOUTH ROW LINE OF E. VENICE AVE PER ORDER OF TAKING SARASOTA COUNTY OR BOOK 1835, PAGE 1475, AT INTERSECTION WITH EAST ROW LINE OF CLERMONT ROAD, THEN S 89°21 '47"E ALONG SAID

SOUTH ROW LINE A DISTANCE OF 317.04 FEET; THEN S 00°27 '17"W ALONG THE WEST LINE OF TRACT 36, A DISTANCE OF 659.38 FEET; THEN N89°22' 50"W ALONG THE SOUTH LINE OF TRACT 36, A DISTANCE OF 316.54 FEET; THEN N00°24'39" E ALONG EAST ROW OF CLERMONT RD., A DISTANCE OF 659.48 FEET TO POINT OF BEGINNING.

CG WITH STIPULATIONS TO CG WITH AMENDED STIPULATIONS

COMMENCE AT THE SOUTHEAST CORNER OF SECTION 10, TOWNSHIP 39 SOUTH, RANGE 19 EAST. SARASOTA COUNTY, FLORIDA; THENCE N. 89°45'49"W,, ALONG THE SOUTH LINE OF SAID SECTION 10, TO THE WESTERLY RIGHT OF WAY OF JACARANDA BOULEVARD AS RECORDED IN ROAD PLAT BOOK 3, PAGE 27, OF THE PUBLIC RECORDS OF SARASOTA COUNTY, FLORIDA A DISTANCE OF 840.73 FEET; THENCE N43°05'08"E., ALONG THE SAID WESTERLY RIGHT OF WAY OF JACARANDA BOULEVARD A DISTANCE OF 721.96 FEET TO A POINT ON A CURVE TO THE LEFT WHICH THE RADIUS LIES N.46°54 '57"W., SAID CURVE HAVING A RADIUS OF 1357.39 FEET. A CENTRAL ANGLE OF 42°20'46", A CHORD BEARING OF N.21°54'40"E. AND A CHORD LENGTH OF 980.54 FEET; THENCE CONTINUING ALONG SAID WESTERLY RIGHT OF WAY OF JACARANDA BOULEVARD ALONG THE ARC OF SAID CURVE, AN ARC LENGTH OF 100322 FEET THENCE CONTINUING ALONG SAID WESTERLY RIGHT OF WAY OF JACARANDA BOULEVARD N.00°47'08"E. TO THE SOUTH RIGHT OF WAY LINE OF EAST VENICE AVENUE PER ORDER OF TAKING IN OFFICIAL RECORDS BOOK 1835, PAGE 1475, OF THE PUBLIC RECORDS OF SARASOTA COUNTY, FLORIDA; A DISTANCE OF 630.00 FEET; THE FOLLOWING (3) CALLS ARE ALONG THE SAID SOUTH RIGHT OF WAY LINE OF EAST VENICE AVENUE; THENCE N.89°22'35"W.,A DISTANCE OF 234.27 FEET; THENCE N.00°07'44"E, A DISTANCE OF 4.00 FEET; THENCE N.89°21'23"W., A DISTANCE OF 410.54 FEET FOR A POINT OF BEGINNING; THENCE S.00°47'08"W., A DISTANCE OF 449.07 FEET: THENCE N.89°21 '23"W. TO THE EAST LINE OF LANDS DESCRIBED IN OFFICIAL RECORDS BOOK 1833, PAGE 1331, OF THE PUBLIC RECORDS OF SARASOTA COUNTY, FLORIDA, A DISTANCE OF 484.41 FEET; THENCE N.00°38' 02"E ALONG SAID EAST LINE TO THE SAID SOUTH RIGHT OF WAY LINE OF EAST VENICE AVENUE A DISTANCE OF 449.07 FEET; THENCE S.89°21'23"E. ALONG SAID SOUTH RIGHT OF WAY A DISTANCE OF 485.60 FEET TO THE POINT OF BEGINNING.

CSC WITH STIPULATIONS TO CSC WITH AMENDED STIPULATIONS COMMENCE AT THE SOUTHEAST CORNER OF

SECTION 10 TOWNSHIP 39 SOUTH, RANGE 19 EAST, SARASOTA COUNTY, FLORIDA; THENCE N89°45'49"W., ALONG THE SOUTH LINE OF SAID SECTION 10 TO THE WESTERLY RIGHT OF WAY OF JACARANDA BOULEVARD AS RECORDED IN ROAD PLAT BOOK 3, PAGE 27. OF THE PUBLIC RECORDS OF SARASOTA COUNTY, FLORIDA, A DISTANCE OF 840.73 FEET; THENCE N.43°05'08"E.. ALONG THE SAID WESTERLY PER ORDER OF TAKING IN OFFICIAL RECORDS BOOK 1835, PAGE 1475, OF THE PUBLIC RECORDS OF SARASOTA COUNTY. FLORIDA; A DISTANCE OF 1025.84 FEET: THE FOLLOWING (3) CALLS ARE ALONG THE SAID SOUTHERLY RIGHT OF WAY LINE OF EAST VENICE AVENUE; -THENCE S89°21'23"E.. A DISTANCE OF 410.54 FEET; THENCE S00°07'44" W., A DISTANCE OF 4.00 FEET; THENCE S.89°22'35"E. TO THE SAID WESTERLY RIGHT OF WAY OF JACARANDA BOULEVARD A DISTANCE OF 234.27 FEET; THENCE S.00'47'08" W. ALONG SAID WESTERLY RIGHT OF WAY OF JACARANDA BOULEVARD A DISTANCE OF 630.00 FEET TO A POINT ON A CURVE TO THE RIGHT, WHICH THE RADIUS LIES N.89'15'43"W., SAID CURVE HAVING A RADIUS OF 1357.39 FEET, A CENTRAL ANGLE OF 16°51'01", A CHORD BEARING OF S.09°09'47"W., AND A CHORD LENGTH OF 397.76 FEET: THENCE CONTINUING ALONG SAID WESTERLY RIGHT OF WAY OF JACARANDA BOULEVARD ALONG THE ARC OF SAID CURVE, AN ARC LENGTH OF 399.20 FEET TO THE POINT OF BEGINNING. RIGHT OF WAY OF JACARANDA BOULEVARD A DISTANCE OF 721.96 FEET TO A POINT ON A CURVE TO THE LEFT THE RADIUS LIES N.46'54 '57"-W.SAID CURVE RAVING A RADIUS OF 1357.39 FEET, A CENTRAL ANGLE 0' F 25'29'45", A CHORD BEARING OF N.30'20'11"E, AND A CHORD LENGTH OF 599.05 FEET; THENCE CONTINUING ALONG SAID WESTERLY RIGHT OF WAY OF JACARANDA BOULEVARD ALONG THE ARC OF SAID CURVE, AN ARC LENGTH OF 604.02 FEET FOR A POINT OF BEGINNING; THENCE N.89°12 '52"W ., A DISTANCE OF 5 86.50 FEET; THENCE N.00°47 '08"E. TO THE SOUTH RIGHT OF WAY LINE OF EAST VENICE AVENUE

Section 3. Restrictions, Stipulations and Safeguards. As used in the stipulations hereinafter set forth, the term "Owner" shall refer to the owner or owners of the property described in Section 2 and their successors and assigns. Upon recording in the public records of Sarasota County, these stipulations shall be covenants running with the land. The use of the property described in Section 2 of this Ordinance, in addition to the applicable restrictions imposed by the Zoning Ordinance, is hereby further limited by and subject to the following restrictions, stipulations and safeguards:

General Conditions Applicable to the Entire Parcel

1. Development of the subject parcel shall comply with the Venice Avenue Corridor Plan (Ordinance No. 89074) and shall adhere to the urban design conditions contained in the "Gateway to Venice Urban Design District," adopted by Ordinance No. 94-074.

2. All development shall be consistent with the Jacaranda Boulevard/Venice Avenue Village Activity Center Sector Plan (Ordinance No. 90-90).

3. The Owner shall be required to maintain the appearance and function of any private drainage facilities to be constructed on the site, including retention ponds and drainage ditches, at its own expense in accordance with applicable federal, state or local regulations. At the time of recording a plat or prior to final construction approval, the Owner shall be required to record in the public records a Notice to Purchaser, approved by Sarasota County, putting purchasers on notice that the maintenance of drainage facilities is a private responsibility.

4. The Master Surface Water Management Plans shall be consistent with the Curry Creek and Hatchett Creek Basin Master Plans.

5. The site plan shall demonstrate how the exchange of flood waters between the Curry Creek and Hatchett Creek Basins will occur.

6. The Master Surface Water Management Plans incorporating stormwater management facilities on the Florida Power and Light (FPL) easement shall be reviewed and approved by FPL before construction on the subject parcel will be authorized.

7. Pursuant to management guidelines contained within the Environment Chapter of *Apoxsee*, all native habitats and associated buffer areas not approved for impact shall be designated as Preserve Areas on submitted site and development plans, and maintained consistent with the Guiding Principles *of Apoxsee*. All activities including, but not limited to, excavating, filling, stockpiling, well drilling, altering of vegetation (including trimming of both trees and understory), and storing of materials shall be prohibited within preservation areas, unless written approval is first obtained from Resource Protection Services. Exception may be granted by Resource Protection Services to facilitate implementation of approved resource management plans or the removal *of* nuisance/invasive vegetation.

8. In accordance with Policy 5.5.11 *of Apoxsee,* a resource management plan, which maintains the functions and values of all preserved and conserved native habitats, and is consistent with the Guiding Principles of *Apoxsee,* shall be submitted to Resource Protection Services with site and development plans. The plan needs to address removal *of* nuisance/invasive plant species from the areas, any proposed planting *of* native trees and/or understory, and shall be consistent with Section E *of* the Environmental Technical Manual contained within Sarasota County's Land Development Regulations.

---

9. A wetland hydroperiod maintenance and monitoring plan, which is consistent with Section C of the Environmental Technical Manual, shall be submitted to Resource Protection Services with site and development plans.

10. All site and development plans shall include a breakdown of the types of open space provided, and the amount of native habitat areas that will be maintained to fulfill open space requirements. Open space requirements shall first be met with on-site wetlands and xeric hammock.

11. Any site and development plans submitted for the subject property shall depict lot alignments in such a manner as to avoid any impacts to on-site protected habitats and buffer areas.

12. In accordance with Policy 5.6.5 of *Apoxsee,* during development of the subject property, all nuisance/invasive plant species shall be removed from the site. Any removal of vegetation from a Preservation Area shall be done in accordance with an approved resource management plan. All removed vegetation shall be disposed of in a County-approved landfill or by another method approved by Resource Protection Services.

13. Exterior lighting on the site shall be directed only toward the subject site and away from adjacent properties and streets.

14. Prior to or concurrent with the development of the subject parcel, the improvements to the Jacaranda Boulevard and Venice Avenue intersection (the "Improvements") as contained in the County's Capital Improvements Plan shall meet the criteria to find the Improvements have available transportation facility capacity consistent with the Concurrency Management Regulations (Chapter 94, Article VII, Exhibit A, Sarasota County Code). Upon the County's approval of an enforceable Development Agreement guaranteeing the Improvements, the intersection shall be found to have adequate capacity to support the transportation impacts of the development.

15. Prior to approval of development orders that would allow cumulative development generating more than 600 net new pm peak hour trips, a traffic impact analysis shall be performed consistent with Sarasota County traffic impact analysis procedures. The study shall identify any improvements needed to mitigate the concurrency and operational impacts of cumulative development on the subject property within the study area. Necessary mitigation, as identified by the approved study, shall be provided prior to or concurrent with approval of construction plans for development generating greater than 600 net new pm peak hour trips.

16. Access to the subject development on Jacaranda Boulevard shall be located and limited to the following:

   a. A right-turn in/right-turn out or directional left turn in shall be permitted, 2500 to 2600 feet south of Venice Avenue (RMF-1 parcel). *

---

   b. An unrestricted full median opening access point shall be permitted 1300 to 1400 feet south of Venice Avenue (RMF-1 and CSC parcels). *

   c. A right-turn in/right-turn out or directional left-turn in shall be permitted, 600 to 700 feet south of Venice Avenue (CSC parcel). *

   d. A right-turn out only shall be permitted, 300 to 400 feet south of Venice Avenue (CSC parcel).*

Note: * Distances shall be measured centerline to centerline. No other access to Jacaranda Boulevard shall be permitted.

17. Access to the subject development on Venice Avenue shall be located and limited to the following:

   a. An unrestricted full median opening access point shall be permitted approximately 2830 feet west of Jacaranda Boulevard, aligning with South Clermont Road (RAH-1 parcel). *

   b. An unrestricted full median opening access point shall be permitted 1000 to 1200 feet west of Jacaranda Boulevard (CG parcel). *

   c. A right-turn in/right-turn out or directional left-turn in shall be permitted, 600 to 700 feet west of Jacaranda Boulevard (CSC parcel). *

   d. A right-turn in only shall be permitted, 300 to 400 feet west of Jacaranda Boulevard (CSC parcel).

Note: * Distances shall be measured centerline to centerline. No other access to Venice Avenue shall be permitted

Conditions Applicable to the RMF-1 Parcel in Addition to the General Conditions

18. Prior to or concurrent with development of the subject parcel, Clermont Road shall be widened to 22 feet and resurfaced over the entire width of the road, from Venice Avenue to the subject parcel's access. The improvements shall be included in the construction plans.

19. Access to the subject development on Clermont Road shall be located and limited to an unrestricted access opening on Clermont Road, 300 to 400 feet south of Venice Avenue, as measured centerline to centerline. No other access to Clermont Road shall be permitted.

20. Outdoor refuse areas shall be set back a minimum of 50 feet from the property lines and shall be screened in accordance with Section 1 1.6.f of the Zoning Ordinance.

21. Outdoor recreation areas shall not be illuminated from 10:00 p.m. to 7:00 a.m. Sunday through Thursday, and from 11:00 p.m. to 7:00 a.m. Friday and Saturday.

22. No structures in excess of thirty-five feet (35'), including any level used for parking, shall be located within one hundred-fifty feet (150') of the southern property line.

Conditions Applicable to CG & CSC Parcels in Addition to the General Conditions

23. All access to outparcels shall be internal to the development.

24. Access to outparcels or parking area drive aisles:

   a. Access driveways shall be no closer than 200 feet from the adjacent public roadway.

   b. Directional median opening access driveways shall be no closer than 150 feet from the adjacent public roadway. *

   c. Right-in/right-out only access driveways shall be no closer than 100 feet from the adjacent public roadway. *

Note: * Distances shall be measured along the access driveway from the inside edge of pavement of the internal access to the inside edge of pavement of the adjacent roadway.

25. At site and development, the parking lot design shall meet the Zoning Ordinance Section 12.19.b.(3) standards. (A minimum 7' wide, curbed grass median is required between rows of cars. No more than 15 parking spaces in a row without a landscaped island.)

26. The design of structures on outparcels shall be coordinated with the main structure on the subject parcel. All buildings shall reflect a "Mediterranean" style architecture. For the purposes of this stipulation, "Mediterranean" style architecture shall include features on buildings such as stucco finishes, tile roofs, and arched openings. Similar colors and materials shall be used on exterior surfaces, and compatibility in roof shape and material and signage is required.

Conditions Applicable to the CSC Parcel in Addition to the General Conditions

27. Development on the CSC zoned portion of the subject parcel shall occur in substantial accordance with the Development Concept Plan dated October 16, 2002, and attached hereto as Exhibit "A", except modified as necessary to comply with the stipulations contained herein. This does not imply or confer any variances from applicable zoning or land development regulations.

Section 4. Effective Date. This Ordinance shall take effect immediately upon receipt of official acknowledgment from the Office of the Secretary of State of Florida that this Ordinance has been filed with said office.

PASSED AND DULY ADOPTED BY THE BOARD OF COUNTY COMMISSIONERS OF SARASOTA COUNTY, FLORIDA, this 22nd day of January 2008.

BOARD OF COUNTY COMMISSIONERS
OF SARASOTA COUNTY, FLORIDA

Chair

ATTEST:

KAREN E. RUSHING, Clerk of the Circuit Court and Ex-Officio Clerk of the Board of County Commissioners of Sarasota County, Florida.

By: Deputy Clerk

MAP SERIES/CONCEPT PLAN

EXHIBIT "A" INSTRUMENT # 2003239184 10 PGS

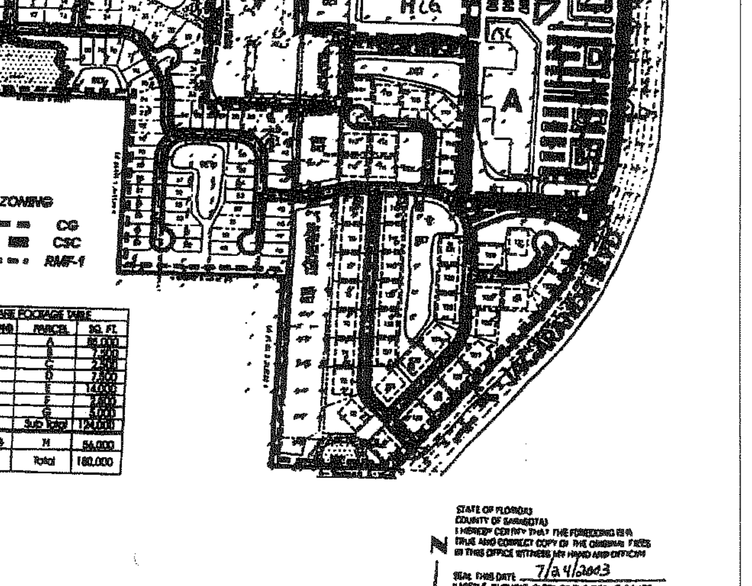

STATE OF FLORIDA COUNTY OF SARASOTA I HEREBY CERTIFY THAT THE FOREGOING IS A TRUE AND CORRECT COPY OF THE ORIGINAL FILED IN THIS OFFICE WITNESS MY HAND AND OFFICIAL SEAL THIS DATE 7/24/2003 KAREN E. RUSHING, CLERK OF THE CIRCUIT COURT EX-OFFICIO CLERK TO THE BOARD OF COUNTY COMMISSIONERS, SARASOTA COUNTY, FLORIDA BY: DEPUTY CLERK

STATE OF FLORIDA COUNTY OF SARASOTA I HEREBY CERTIFY THAT THE FOREGOING IS A TRUE AND CORRECT COPY OF THE ORIGINAL ... THIS OFFICE WITNESS MY HAND AND ... SEAL THIS DATE 1/23/08 KAREN E. RUSHING, CLERK OF THE CIRCUIT COURT EX-OFFICIO CLERK TO THE BOARD OF COUNTY COMMISSIONERS, SARASOTA COUNTY, FLORIDA BY: DEPUTY CLERK

THIS DOCUMENT RECEIVED BY: ... MANAGEMENT ON ... 16, 2002

RECEIVED AUG 24 2007 BY:

NOT TO SCALE

VERONA RESERVE

CLIENT: TAYLOR MORRISON OF FLORIDA, INC.

ZONING INFORMATION DOCUMENTS (ORDINANCE NO. 2008-014)

WALDROP ENGINEERING
CIVIL ENGINEERING & LAND DEVELOPMENT CONSULTANTS
28100 BONITA GRANDE DRIVE - SUITE 305 BONITA SPRINGS, FL 34135
P: 239-405-7777 F: 239-405-7899 EMAIL: info@waldropengineering.com

PLAN REVISIONS

FLORIDA CERTIFICATE OF AUTHORIZATION #8636

NICHOLAS B. SPEACH, P.E. No 70207 STATE OF FLORIDA
NICHOLAS B. SPEACH, P.E.
FL CERTIFICATE NO. 70207
12/5/10

SET NUMBER: 225-01-01

SHEET: 37

J:\225-01 Verona Reserve\AutoCAD\225-01-01 Concurrent Subdivision Plans\Rev04\22501013 7.dwg Dec 14, 2010 - 2:21pm

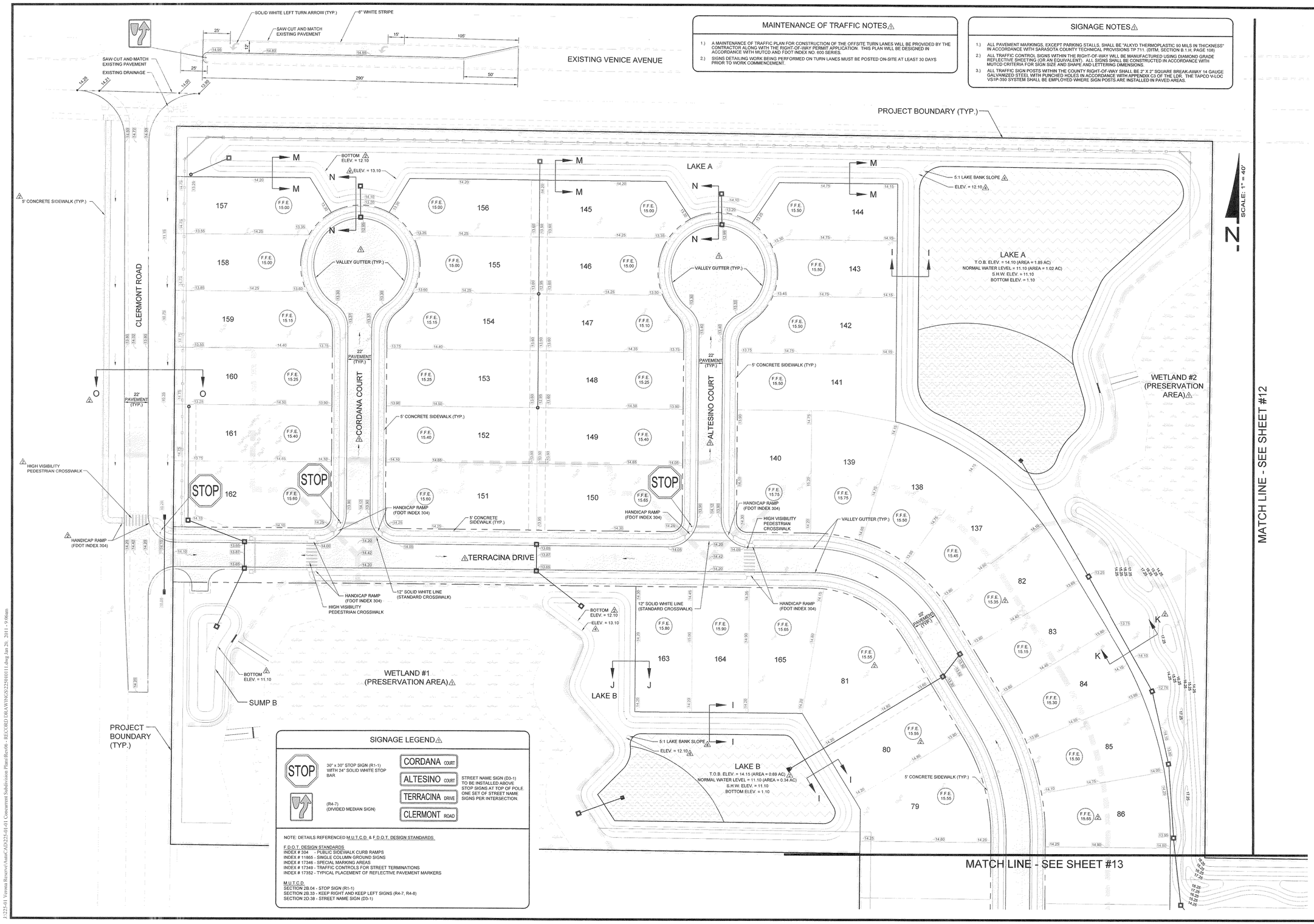

MAINTENANCE OF TRAFFIC NOTES

1.) A MAINTENANCE OF TRAFFIC PLAN FOR CONSTRUCTION OF THE OFFSITE TURN LANES WILL BE PROVIDED BY THE CONTRACTOR ALONG WITH THE RIGHT-OF-WAY PERMIT APPLICATION. THIS PLAN WILL BE DESIGNED IN ACCORDANCE WITH MUTCD AND FDOT INDEX NO. 600 SERIES.

2.) SIGNS DETAILING WORK BEING PERFORMED ON TURN LANES MUST BE POSTED ON-SITE AT LEAST 30 DAYS PRIOR TO WORK COMMENCEMENT.

SIGNAGE NOTES

1.) ALL PAVEMENT MARKINGS, EXCEPT PARKING STALLS, SHALL BE "ALKYD THERMOPLASTIC 90 MILS IN THICKNESS" IN ACCORDANCE WITH SARASOTA COUNTY TECHNICAL PROVISIONS TP 711. (DITM, SECTION B.1.H, PAGE 108)

2.) ALL TRAFFIC CONTROL SIGNS WITHIN THE RIGHT-OF-WAY WILL BE MANUFACTURED USING DIAMOND GRADE REFLECTIVE SHEETING (OR AN EQUIVALENT). ALL SIGNS SHALL BE CONSTRUCTED IN ACCORDANCE WITH MUTCD CRITERIA FOR SIGN SIZE AND SHAPE AND LETTERING DIMENSIONS.

3.) ALL TRAFFIC SIGN POSTS WITHIN THE COUNTY RIGHT-OF-WAY SHALL BE 2" X 2" SQUARE BREAK-AWAY 14 GAUGE GALVANIZED STEEL WITH PUNCHED HOLES IN ACCORDANCE WITH APPENDIX C3 OF THE LDR. THE TAPCO VLOC VS1P-350 SYSTEM SHALL BE EMPLOYED WHERE SIGN POSTS ARE INSTALLED IN PAVED AREAS.

SIGNAGE LEGEND

STOP — 30" x 30" STOP SIGN (R1-1) WITH 24" SOLID WHITE STOP BAR

(R4-7) (DIVIDED MEDIAN SIGN)

CORDANA COURT
ALTESINO COURT
TERRACINA DRIVE
CLERMONT ROAD

STREET NAME SIGN (D3-1) TO BE INSTALLED ABOVE STOP SIGNS AT TOP OF POLE. ONE SET OF STREET NAME SIGNS PER INTERSECTION.

NOTE: DETAILS REFERENCED M.U.T.C.D. & F.D.O.T. DESIGN STANDARDS.

F.D.O.T. DESIGN STANDARDS
INDEX # 304 - PUBLIC SIDEWALK CURB RAMPS
INDEX # 11865 - SINGLE COLUMN GROUND SIGNS
INDEX # 17346 - SPECIAL MARKING AREAS
INDEX # 17349 - TRAFFIC CONTROLS FOR STREET TERMINATIONS
INDEX # 17352 - TYPICAL PLACEMENT OF REFLECTIVE PAVEMENT MARKERS

M.U.T.C.D.
SECTION 2B.04 - STOP SIGN (R1-1)
SECTION 2B.33 - KEEP RIGHT AND KEEP LEFT SIGNS (R4-7, R4-8)
SECTION 2D.38 - STREET NAME SIGN (D3-1)

WALDROP ENGINEERING
CIVIL ENGINEERING & LAND DEVELOPMENT CONSULTANTS
28100 BONITA GRANDE DRIVE - SUITE 305 BONITA SPRINGS, FL 34135
P: 239-405-7777 F: 239-405-7599 EMAIL: info@waldropengineering.com

VERONA RESERVE

CLIENT: TAYLOR MORRISON OF FLORIDA, INC.

PAVING, SIGNAGE & GRADING SITE PLAN (A)

PLAN REVISIONS

1	07/29/10	REVISED PER SARASOTA COUNTY COMMENTS
2	09/14/10	REVISED PER SARASOTA COUNTY COMMENTS
3	12/14/10	REVISED PER SARASOTA COUNTY COMMENTS

FLORIDA CERTIFICATE OF AUTHORIZATION #8636

NICHOLAS B. SPEACH, P.E. LICENSE No 70207

NICHOLAS B. SPEACH, P.E. 12/15/10
FL CERTIFICATE NO. 70207

SET NUMBER: 225-01-01

SHEET : 11

J:\225-01 Verona Reserve\Autoc\CAD\225-01-01 Concurrent Subdivision Plans\Rev06 - RECORD DRAWINGS\225010111.dwg Jan 26, 2011 - 9:06am